ENGINEERING ANALYSIS

OF

DAMS

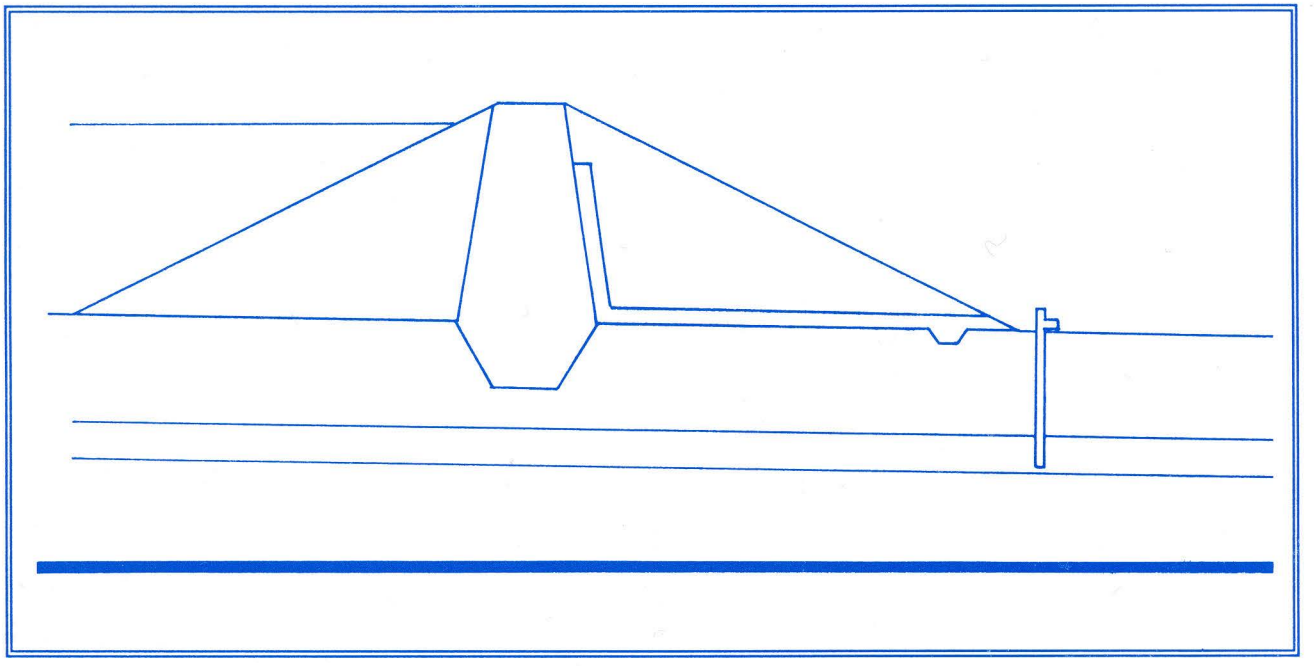

BY
BRIAN J. SWENTY

MISSOURI DEPARTMENT OF NATURAL RESOURCES
DIVISION OF GEOLOGY AND LAND SURVEY
DAM AND RESERVOIR SAFETY PROGRAM

AUGUST 1989

FOREWORD

The first state legislation aimed at regulating dams was passed in 1889 and was called the Dams, Mills, and Electric Power Law. That law was concerned only with damages caused by construction and lake formation. It did not address the engineering aspects of design or safety of dams.

During the period 1977-81, the Corps of Engineers conducted a nationwide inventory and inspection of dams. The results indicated that Missouri ranked fourth in the United States in total number of dams and first in the total number of unsafe dams. Of 613 dams inspected, approximately 75% were considered unsafe. The final report submitted to Congress by the Corps cited Missouri as having inadequate legislation, regulatory procedures, technical staff, and funding.

In September 1979, the Governor signed House Bill 603 into law. The bill became sections 236.400 through 236.500 RSMo and is known as the dam safety law. It authorized the creation of a Dam and Reservoir Safety Council appointed by the Governor and a staff within the Department of Natural Resources to implement the law. Regulations were approved in August 1981 and Missouri began the process of upgrading unsafe dams.

Only dams 35 feet or greater in height are regulated by the Natural Resources' Division of Geology and Land Survey, dam and reservoir safety program. Exemptions to the dam safety law include:

- dams owned and operated by the federal government
- dams licensed by the Federal Energy Regulatory Commission
- dams impounding water used primarily for agricultural purposes

During the past eight years, numerous owners have had their dams inspected in accordance with the law. As these dams were evaluated and analyzed, it became clear that an engineering analysis manual was needed to provide engineers with a technical reference to perform their computations. An abundance of engineering text books, design manuals, and construction guidelines have been written which pertain to the design of dams, but there are few booklets dedicated to the subject of dam safety analysis.

Dam Safety is a complex issue. To determine whether a dam is safe requires a knowledge of hydrology, hydraulic engineering, geotechnical engineering, geology, seismology, surveying, and structural analysis. This manual is intended to provide engineers with a description of analytical techniques that can be used to evaluate the safety of dams.

Two of the goals of the dam safety law are to ensure that new dam construction meets minimum safety standards and defects at older unsafe dams are eliminated. It is my hope that this manual will provide the technical assistance necessary to accomplish these goals.

G. Tracy Mehan III
Director, Missouri Department of Natural Resources

ENGINEERING ANALYSIS OF DAMS

By Brian J. Swenty, Ph.D., P.E.
Chief Engineer
Dam and Reservoir Safety Program

Department of Natural Resources
Division of Geology and Land Survey
P.O. Box 250, Rolla, MO 65401

ACKNOWLEDGEMENTS

This booklet was prepared under the direction of Dr. James H. Williams, Director of the Division of Geology and Land Survey, Missouri Department of Natural Resources, and the Missouri Dam and Reservoir Safety Council. The council is a non-paid policy making body appointed by the Governor with the consent of the Senate. Members of the council include Dr. John D. Rockaway, Jr., chairman; Charles I. Mansur, vice-chairman; Carol Eichling; Terry Perkins; Dean E. Freeman; Donald W. Laraway; and Stanfred L. Hilty.

This booklet was printed with funding by a grant from the Association of State Dam Safety Officials (ASDSO) and the Federal Emergency Management Agency (FEMA). The support of these two organizations and their interest in dam safety is acknowledged and deeply appreciated.

Within the Missouri Department of Natural Resources, Division of Geology and Land Survey, there were several individuals who made significant contributions to the manual's development. James L. Alexander, Russell C. Adams, Robert A. Clay, and Ralph P. Hess of the Dam and Reservoir Safety Program staff reviewed the entire manuscript and made many helpful suggestions. Mr. Alexander and Mr. Clay also assisted in the preparation of many of the illustrations. Dr. Robert H. Hansman, Editor for the Division of Geology and Land Survey, edited the booklet and was especially helpful in developing and organizing the list of references. Dr. James H. Williams, State Geologist and Division Director, reviewed the chapter on geology. Robert E. Myers, State Land Surveyor, reviewed several chapters including the chapter on engineering surveys. Special thanks to Marge Paulsmeyer, Dam and Reservoir Safety Program Secretary, who assisted in typing the booklet and making necessary revisions.

The booklet was reviewed by several professional engineers in private practice, in government, and at the University of Missouri-Rolla. Among those reviewing all or parts of the booklet include Hugh A. Curry, Jerry Edwards, William F. Lueckenhoff, Albert B. Becker, Richard H. Frueh, Dr. Jerome A. Westphal, Dr. Richard W. Stephenson, J. Larry Hubbard, and Gene C. Bowen. Numerous comments were received and several changes and additions were made to the final draft.

Many state and federal agencies provided information on the subjects covered in this booklet. The use of references and other information is appreciated.

TABLE OF CONTENTS

		Page
LIST OF ILLUSTRATIONS		v
LIST OF TABLES		v
I	INTRODUCTION	1
II	PERMITS	2
	A. Construction Permits	2
	B. Safety Permits	2
	C. Registration Permits	2
III	HYDROLOGIC CONSIDERATIONS	4
	A. Downstream Environmental Zone	4
	B. Spillway Design Flood Precipitation Values	6
	C. Watershed Data	7
	D. Initial Abstraction and Infiltration	9
	E. Unit Hydrographs	9
	F. Time of Concentration	14
	G. Rainfall Hyetographs	16
	H. Inflow Hydrograph Computation	16
IV	HYDRAULIC CONSIDERATIONS	19
	A. Closed Conduit Hydraulics	19
	1. Design Considerations for Conduit Spillways	19
	2. Shaft Spillways	19
	3. Culvert Spillways	23
	4. Flow under Bridges	23
	B. Open Channel Hydraulics	23
	1. Water Surface Profiles	25
	2. Critical Flow Computations	28
	C. Reservoir Routing	29
V	GEOTECHNICAL CONSIDERATIONS	32
	A. Soil Classification	33
	B. Foundation Cutoffs	33
	C. Foundation and Embankment Drainage	33
	1. Chimney Drains	35
	2. Blanket Drains	35
	3. Trench Drains	35
	4. Relief Wells	35
	D. Structural Stability	36
	1. End of Construction Case	38
	2. Steady Seepage Cases	38
	3. Sudden Drawdown	39
	4. Earthquake	39
	E. Protection of Upstream Slopes	40

Page

F. Instrumentation 40
1. Seepage and Leakage 40
2. Embankment Movements 40
3. Piezometric Pressures 41
VI ANALYSIS OF CONCRETE GRAVITY STRUCTURES 42
A. Forces Acting on the Dam 42
1. External Water Pressure 43
2. Internal Water Pressure 44
3. Silt Pressure 44
4. Ice Pressure 44
5. Earthquake 44
a. Horizontal Earthquake Force 45
b. Vertical Earthquake Force 46
6. Weight of Structure 46
B. Requirements for Stability 46
1. Overturning 46
2. Sliding 47
3. Structural Integrity 47
VII GEOLOGICAL CONSIDERATIONS 48
A. Core Trench Requirements 48
B. Spillways 49
VIII ENGINEERING SURVEYS 50
A. Site Selection Survey 50
B. Construction Surveying 51
C. Analyzing Existing Dams 51
REFERENCES 53
APPENDICES
APPENDIX A: PERMIT FORMS 55
APPENDIX B: INVENTORY FORMS 63
APPENDIX C: RAINFALL DATA FOR MISSOURI 67

LIST OF ILLUSTRATIONS

Figures | Page

3.1 Topographic Map of Downstream Environmental Zone 5
3.2 Method of Computing PMP values for Drainage Areas Greater than 10 Square Miles 6
3.3 Topographic Map of Drainage Area 7
3.4 Soil Map of Drainage Area 8
3.5 SCS Dimensionless Unit Hydrograph 13
3.6 Gray's (1961) Method of Computing Channel Slope 14
4.1 Profile of a Drop Inlet Spillway 20
4.2 Combined Spillway Rating Curve for a Conduit Spillway 21
4.3 Conduit Spillway Calculation Form 22
4.4 Flow Through a Rectangular Orifice 23
4.5 Plan View of an Earth Dam and Spillways 25
4.6 Energy in Gradually Varied Open Channel Flow 26
4.7 Storage versus Outflow Curve for a Reservoir 30
4.8 $S + O\Delta t/2$ versus Outflow Curve for a Reservoir 31
5.1 Types of Dams in Missouri 32
5.2 Methods of Constructing Tailings Dams 33
5.3 Unified Soil Classification Chart (ASTM-2487) 34
5.4 Types of Drains 35
5.5 Circular Failure Surface in an Earthfill Dam 36
5.6 Free Body Diagram - Simplified Bishop Method 37
5.7 Phreatic Surface in an Earthfill Dam 39
6.1 Forces Acting on a Concrete Gravity Dam (From Design of Small Dams) 43
6.2 Water Pressure on an Overflow Concrete Dam (From Design of Small Dams) 44
6.3 Coefficient for Pressure Distribution for Constant Sloping Surfaces (From Design of Small Dams) 45
6.4 Foundation Base Pressures for a Concrete Gravity Dam (From Design of Small Dams) 46

LIST OF TABLES

Tables | Page

3.1 Runoff Curve Numbers - Urban Areas 10
3.2 Runoff Curve Numbers - Agricultural Lands[1] 11
3.3 Runoff Curve Numbers - Noncultivated Agricultural Lands 12
3.4 Average Time Distribution of Heavy Rainfall at a Point 17
3.5 Procedure for Computing an Inflow Hydrograph 18
4.1 Geometric Elements of Trapezoidal Channels 24
4.2 Standard Step Method of Computation 27

CHAPTER I

INTRODUCTION

The purpose of this booklet is to provide engineers with information regarding the analysis of dams in Missouri. This booklet does not represent and should not be considered a comprehensive step-by-step set of requirements for dam design and analysis. It should be used simply as a technical reference. No discussions were included regarding the preparation of plans and specifications for new dams. Other agencies, such as the Soil Conservation Service, the U. S. Army Corps of Engineers, and the Bureau of Reclamation, have publications which deal with this topic.

There are many acceptable methods that can be used to perform an engineering analysis of a dam and spillway. Suggested standards are listed in this booklet along with recommended methods and references. When a permit application is submitted to the Dam and Reservoir Safety Program, the engineering computations are reviewed by the Chief Engineer and his staff on a case-by-case basis. Engineers may use methods of analysis and design which differ from those presented in this manual. Latitude is provided to engineers who use other methods which produce a product that meets the minimum safety criteria in the regulations and the dam safety law.

A typical analysis includes all or part of the following aspects of engineering:

- Hydrological
- Hydraulic
- Geotechnical
- Structural Stability
- Seismic
- Geological

In this manual the word "dam" refers to any artificial or manmade barrier which is 35 feet or more in height measured either from the natural bed of the stream or watercourse or lowest point on the toe of the dam (whichever is lower) up to the crest elevation, together with appertenant works. Dams less than 35 feet in height are not regulated by the Dam and Reservoir Safety Program.

The objective of the Missouri Department of Natural Resources, Dam and Reservoir Safety Program is to insure that dams in Missouri are safely constructed, operated, and maintained. The Code of State Regulations contain minimum safety criteria for both new and existing dams. New dams are those constructed after August 13, 1981.

There are several differences between the criteria for new and existing dams. For example, engineers do not have to show that existing dams meet the stability criteria unless significant modifications are made to the height, slope, or water storage elevation. The seismic criteria apply only to new dams. For a complete description of the applicable criteria, see 10 CSR 22-3.020.

Geological considerations are very important in the analysis and design of new dams. A short discussion of geology and its relationship to dams is included in this booklet. More detailed information, such as geological maps, bore logs, and publications on Missouri geology, can be obtained from the Department of Natural Resources, Division of Geology and Land Survey.

New construction and the analysis of existing dams require field surveys of the embankment and spillways. A chapter on engineering surveying has been provided in this manual. Under Missouri law, engineering surveys can be performed by a registered professional engineer; however, boundary and property surveys must be performed by a registered land surveyor.

The appendices contain copies of permit applications and certification forms for engineers. For more information, contact:

Chief Engineer
Dam and Reservoir Safety Program
Department of Natural Resources
P.O. Box 250
Rolla, Missouri 65401
Phone (314) 364-1752

CHAPTER II

PERMITS

The owner of a proposed new dam 35 feet or more in height is required to obtain a construction permit to build the dam and a safety permit to operate the dam and reservoir. Owners of existing dams 35 feet or more in height are required to obtain registration permits in accordance with the schedule in 10 CSR 22-2.020(2). Significant modifications to existing dams also require a construction permit. Significant modifications are defined in 10 CSR 22-1.020(50). Exemptions from these permit requirements have been provided in the dam safety law for the federal government and owners of agricultural dams which were constructed in accordance with 10 CSR 22-2.010(3).

A. Construction Permits

In order to show that a dam will meet the minimum safety criteria in the code of state regulations, an engineering report must be submitted with the permit application, plans, and specifications. In most cases, hydrologic, hydraulic, geotechnical, and structural computations must be performed. Sufficient detail must be included in the report for the analysis to be verified. The staff of the Dam and Reservoir Safety Program does not perform a comprehensive check of the engineer's computations. Instead, data is taken from the engineers report and an independent analysis is performed to insure that the minimum safety standards are met. If a discrepancy is found between the results of the staff analysis and the engineer's report, the engineer's computations are examined in more detail to resolve the problem.

When a construction permit is issued to build or modify a dam, the owner is required to notify the Chief Engineer when construction begins. An engineer from the Dam and Reservoir Safety Program normally inspects new dam sites during three key activities; the construction of the core trench, construction of internal drains, and installation of pipes through the embankment. It is important for the owner to maintain communication with his engineer, the contractor, and the Dam and Reservoir Safety Program staff throughout construction. Inspections during critical construction activities provide information needed to prepare as-built drawings and safety permit applications following construction.

Construction permits are normally issued for a period of one year to start construction and one additional year to complete construction.

B. Safety Permits

A safety permit is basically an operating permit for dams that were constructed after August 13, 1981. A copy of the permit application and the checklist used to review the applications are included in Appendix A. The owner's engineer must submit a certification that the dam was built substantially in accordance with the approved plans and specifications. Safety permit applications must include as-built drawings if significant modifications were made to the original design drawings during construction. Appropriate engineering computations should accompany the application if as-built drawings are submitted.

Safety permits are usually issued for a period of 5 years. During this time, the owner must maintain the dam in accordance with an approved maintenance and operation plan. The Missouri Department of Natural Resources (1986) published the booklet, Maintenance, Inspection, and Operation of Dams in Missouri which is a good reference for developing a maintenance and operation plan.

Sixty days prior to the expiration of the safety permit, the owner should contact the staff of the Dam and Reservoir Safety Program and request a permit renewal inspection. The permit renewal inspection includes visual observations of the dam, a review of maintenance records, and a site visit to the area downstream of the dam. Assuming no observable defects are found and the downstream hazard zone is unchanged, the permit is renewed for an additional five year period. If changes in the downstream hazard zone require spillway or dam crest modifications, a construction permit must be obtained to perform the work.

Safety permits for tailings dams constructed after August 13,1981 include provisions for phased, stepped, or continuous construction. They must be renewed at five year intervals or whenever major changes are made to the plans and specifications on file with the Dam and Reservoir Safety Program. Safety permits are required for tailings dams after closure of the mining and milling operation unless the dams meet the retaining/retarding structure exemption criteria listed in 10 CSR 22-2.010(7).

C. Registration Permits

There are approximately 640 dams in Missouri that are regulated by the Dam and Reservoir Safety Council. Over 95% of these dams were constructed prior to August 13, 1981. These older dams must be operated under the provisions of a registration permit. Like safety permits, registration permits are operating permits for dams that have been shown to meet the minimum safety criteria in the dam safety law.

Before a registration permit can be issued, the dam must be inspected and analyzed to show that it meets the

minimum safety standards in the Rules and Regulations of the Dam and Reservoir Safety Council. Dams must have sufficient spillway capacity to pass the design flood without overtopping and all observable defects must be corrected or monitored. Observable defects are described in 10 CSR 22-3.030(1)(A)1. Stability calculations are not required unless significant modifications are made to the height of the dam, the slopes, or the water storage elevation. Hydrologic and hydraulic calculations should be included in the inspection report or in a separate engineering report. If the dam must be modified to correct observable defects, a construction permit may be required depending on the extent of the modifications.

In addition to the spillway calculations, two certifications, a statement concerning the stability of the dam, and a maintenance and operation plan must be submitted prior to issuance of the first registration permit. A blank registration permit application, a review checklist, and a standard certification form are included in Appendix A. The booklet, Maintenance, Inspection, and Operation of Dams in Missouri is a good reference for developing a maintenance and operation plan.

Sixty days prior to the expiration of the registration permit, the owner should contact the staff of the Dam and Reservoir Safety Program and request a permit renewal inspection. Assuming no observable defects are found and the downstream hazard zone is unchanged, the permit is renewed for an additional five year period. If changes in the downstream hazard zone require spillway or dam crest modifications, a construction permit must be obtained to perform the work.

Registration permits for tailings dams in existance before August 13,1981 can include provisions for phased, stepped, or continuous construction. They must be renewed at five year intervals or whenever major changes are made to the plans and specifications on file with the Dam and Reservoir Safety Program. Registration permits are required for tailings dams after closure of the mining and milling operation unless the dams meet the retaining/retarding structure exemption criteria in 10 CSR 22-2.010(7).

CHAPTER III

HYDROLOGIC CONSIDERATIONS

The analysis of an existing dam and the design of a new dam includes the hydrological analysis of the watershed and a hydraulic analysis of the spillways. Generally the hydrologic computations conclude with the computation of the inflow hydrograph to the reservoir. Parameters used in the hydrologic analysis include the watershed area, unit hydrograph parameters, lag time, total rainfall, rainfall distribution (hyetograph), infiltration characteristics of the watershed, and initial abstraction. In the case of kinematic and dynamic wave modeling and breach analysis, channel routing will also be included in the definition of hydrological computations.

Hydraulic computations involve reservoir routing and rating open channel and closed conduit spillways. This differentiation, although not universal in the field of civil engineering, will nonetheless be used throughout this booklet.

The flood used for design to prevent the failure of the dam is termed the "spillway design flood" (SDF). As defined in 10 CSR 22-1.020 (52), the spillway design flood is the specified flood discharge that may be expected from the most severe combination of critical meteorologic and hydrologic conditions that are reasonably possible in an area and for which the dam and reservoir are designed. Determination of the spillway design flood is based on a rational consideration of the chances of the simultaneous occurrence of several elements or conditions which contribute to the flood. A major aspect of the spillway design flood computation is the determination of the runoff that would result from an occurrence of a percentage of the probable maximum precipitation. This hydrometeorological approach is necessary because contemporaneous site-specific meteorologic and streamflow data do not exist for most small watersheds in Missouri. If actual streamflow records of considerable length are available for the general region in which the dam is located, this data should be used in the determination of the SDF. This chapter, however, is primarily concerned with synthetic hydrology and techniques used to simulate the rainfall runoff process on a watershed.

A. Downstream Environment Zone

The downstream environment zone is defined as an area downstream from a dam that would be affected by inundation in the event the dam failed with the reservoir at the emergency spillway crest elevation or the dam crest elevation, in the absence of an emergency spillway. This is typically termed a "sunny-day" failure. Inundation is defined as a minimum of 2 feet of water over the first floor elevation of affected structures. Three environmental classes are defined in 10 CSR 22-2.040(1). Class I is high hazard, Class II is significant hazard, and Class III is low hazard. If a sufficient number of homes are located downstream of a dam, a breach analysis is required to justify a Class II or Class III downstream environmental zone designation. It may be advantageous to the engineer performing the computations to meet with the staff of the Dam and Reservoir Safety Program before a breach analysis is conducted. In many cases, a downstream enviornmental zone classification can be agreed upon without computations.

A dam breach analysis involves a specific analytical approach rather than the use of procedures described for spillway design. There are many models available for performing a breach analysis. The two most widely used models in Missouri are DAMBRK and HEC-1. Recently, private engineers have modified the input structure to the National Weather Service's DAMBRK program, originally developed by Fread (1984). These changes are an attempt to make the model more user friendly and add attractive graphics capabilities. The DAMBRK model considers rapidly varying, unsteady flow in channels and includes off channel storage. It provides an engineer with the most accurate method of simulating a dam failure and routing the flood wave downstream. Despite the capabilities of DAMBRK, the staff of the Dam and Reservoir Safety Program have found that the U.S. Army Corps of Engineers (1981) Hydrologic Engineering Center (HEC) Flood Hydrograph Model (HEC-1) produces reasonable results for dam break analyses.

In order to use HEC-1 to conduct a breach analysis and consider the effects of off-channel storage, the engineer must first rate the channel(s) downstream by performing a backwater analysis. The Corps of Engineers (1985) Water Surface Profile Model (HEC-2) is typically used to perform these computations. As a first estimate, the engineer can use cross sections derived from USGS topographic maps. However, these sections produce results only as reliable as the degree of accuracy of the map. This is normally 10 feet for maps with twenty foot contours and 5 feet for maps with ten foot contours. If additional accuracy is required, surveyed cross sections of the valley must be obtained.

When the channel has been rated for a range of flowrates, the engineer must select the dam failure criteria. The final breach geometry and the time to failure are the two most significant parameters to select. According to Fread (1984), the final breach width should be selected in the range of one to three times the height of the dam, the side slope of the breach should vary from 0-2 horizontal to 1

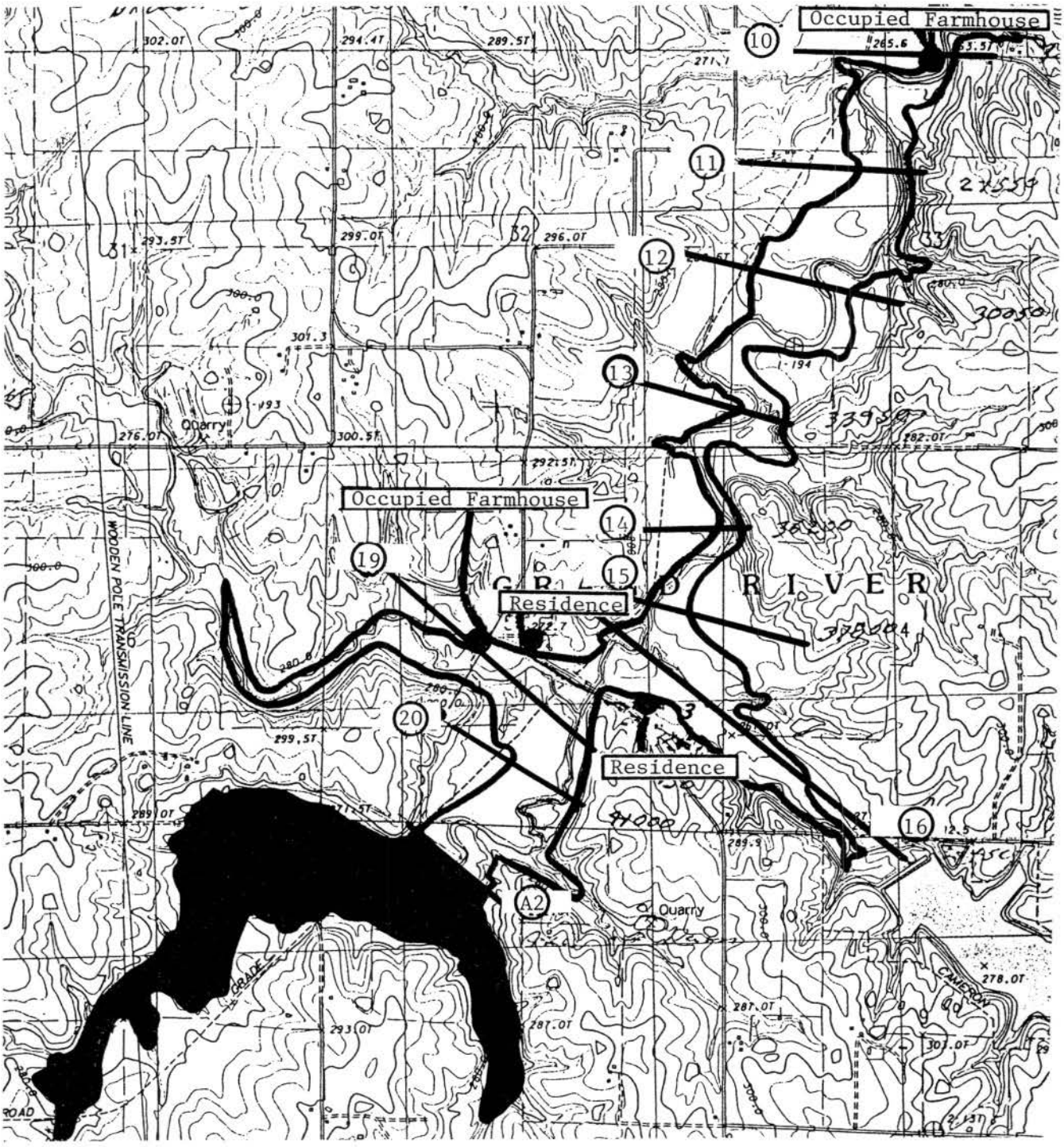

Figure 3.1 Topographic Map of Downstream Environmental Zone

vertical, and the time to breach should be in the range of 0.5 to 4 hours. For concrete gravity and arch dams, the time to breach is typically considered to be 10 minutes or nearly instantaneous. For earth dams, a breach width equal to the height of the dam and a sideslope of 1 horizontal to 1 vertical are normally used unless the dam contains observable geotechnical defects.

Upon completion of the breach analysis, a water surface profile should be drawn of the flood wave created by the failure of the dam. The profile should include the elevation of all homes that would be inundated by the flood wave. When topographic cross sections are used, the profile should also include the estimated elevations of all homes according to the degree of accuracy of the map.

Finally, a topographic map should be submitted as shown in Figure 3.1. It should include the location of the

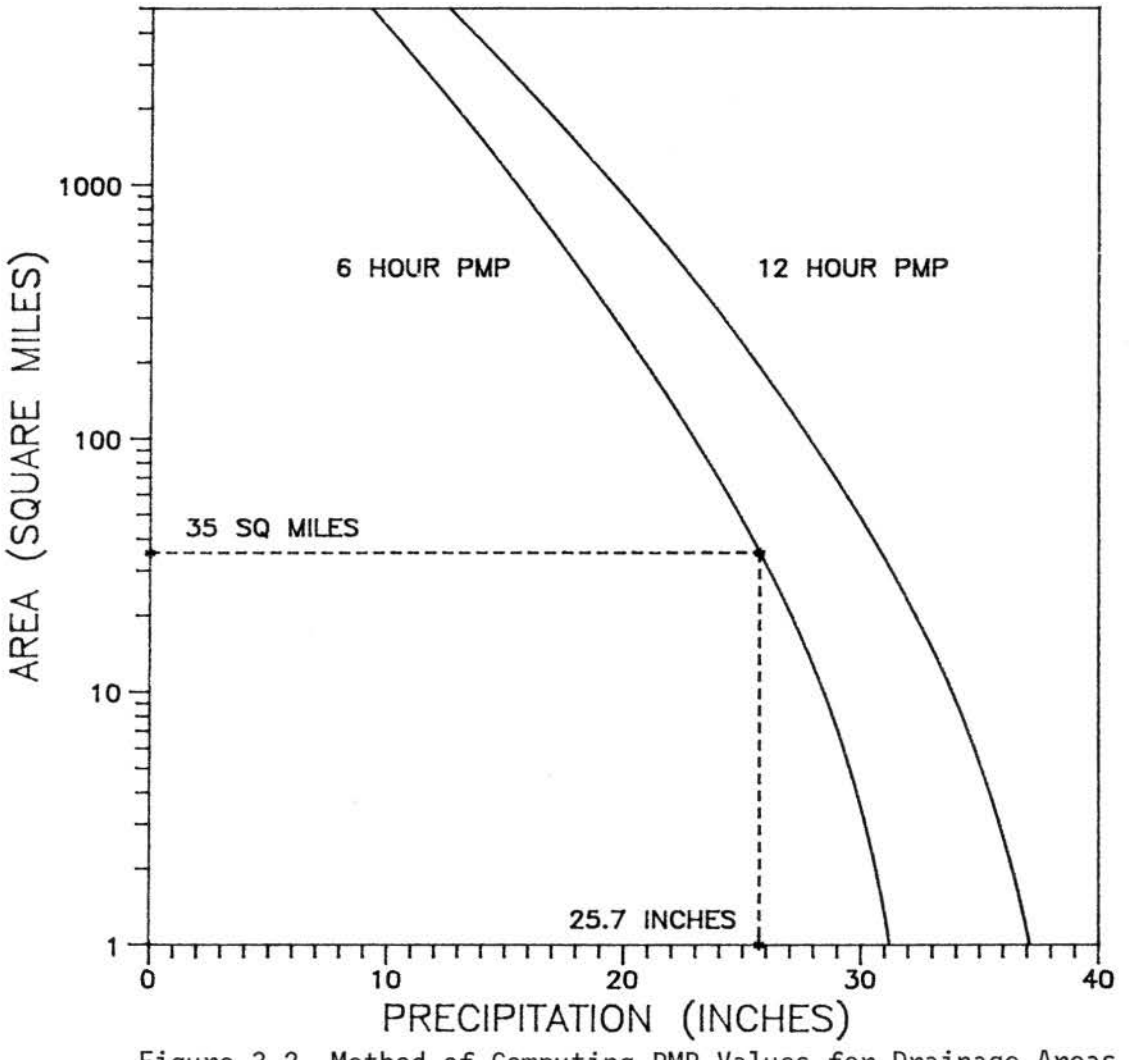

Figure 3.2 Method of Computing PMP Values for Drainage Areas

dam and reservoir, the location of stream cross sections used in the breach analysis, the boundary of the breach floodplain, and verified locations of permanent dwellings, campgrounds, industrial buildings, and public buildings within the breach floodplain. Because the cultural data shown on topographic maps may be several years old, field verification of the information on the map is essential.

B. Spillway Design Flood Precipitation Values

The precipitation values listed in Table 5, 10 CSR 22-3.020, must be used to determine the spillway design flood for both new and existing dams. After the downstream environmental class has been determined, the precipitation value to be used in the hydrologic computations can be selected. The probable maximum precipitation (PMP) can be obtained from Hydrometeorological Report 51, Probable Maximum Precipitation Estimates, United States East of the 105th Meridian, published by the U.S. Department of Commerce (1978). This publication contains PMP values for watersheds east of the 105th meridian that range in size from 10 to 20,000 square miles. Rainfall durations range from 6 to 72 hours. The National Weather Service states that "point" PMP values are likely to be greater than the 10 square mile values; however, in performing dam safety analyses, it is acceptable to use the 10 square mile PMP values rather than deriving a PMP value for a smaller area. This procedure is allowed to compensate for the unliklihood that a small watershed will receive the most intense rainfall in any storm. For drainage areas greater than 10 square miles, the engineer has the option of determining the PMP value for the area being considered by using the method shown in Figure 3.2. This method is explained in more detail in Hydrometeorological Report 51.

Several different duration rainfall events must be ana-

Figure 3.3 Topographic Map of Drainage Area

lyzed. The duration that produces the highest reservoir elevation in the overtopping analysis is termed the critical duration rainfall event. The search for this event is limited to the durations listed in Hydrometeorological Report 51 (6, 12, 24, 48 and 72 hour events). For watersheds less than 1 square mile in size the critical duration event is normally the 6 or 12 hour event.

If a grass lined emergency spillway is proposed for a new dam or the modification of an existing dam, it is advisable to design it so that it will only be used for rainfall events in excess of the 50 or 100-year events. Values for these frequency based rainfall events can be found in Technical Paper 40, Rainfall Frequency Atlas of the United States, published by the U.S. Department of Commerce (1961).

Appendix C contains total rainfall values, by county, for 6-hour, 12-hour, and 24-hour frequency based and PMP events in Missouri. The PMP values are for 10 square mile areas only. For other durations, areas, and return periods, engineers should consult Hydrometeorological Report 51 and Technical Paper 40.

C. Watershed Data

All available information concerning watershed characteristics should be assembled. As shown in Figure 3.3, a map of the drainage area should be prepared showing the drainage system, contours, drainage boundaries, and locations of any precipitation stations and streamflow gaging stations. Available data on soil types, cover, and land usage provide valuable guides to judgement and should also be assembled. If the Soil Conservation Service (SCS) has published a soil survey booklet for the county in which the drainage area is located, a soil map can be developed as shown in Figure 3.4. Engineers are advised to contact the county SCS office for a copy of the soil survey booklet.

Land use, such as woodland, pasture, farmland, and

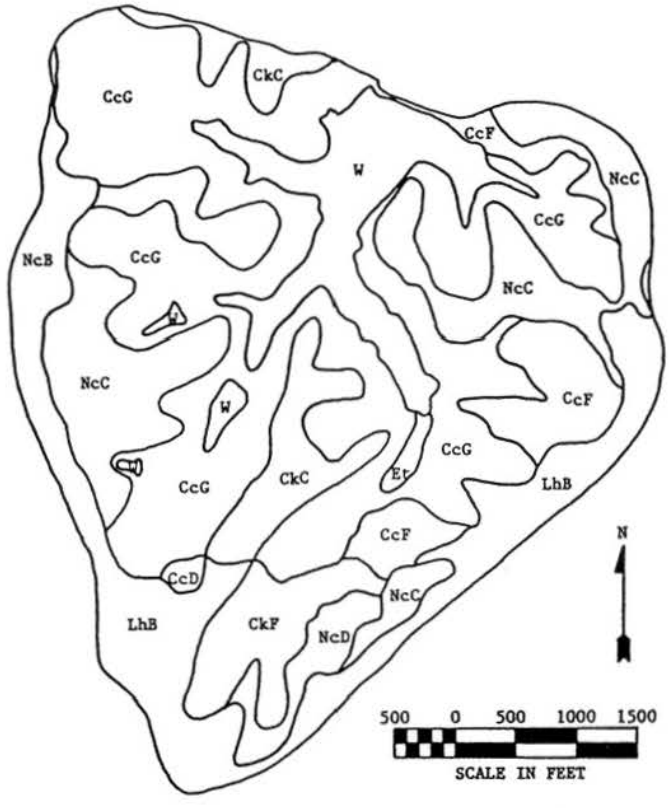

SYMBOL	SOIL TYPE	SLOPE
CcD	Clarksville Cherty Silt Loam	9-14%
CcF	Clarksville Cherty Silt Loam	14-30%
CcG	Clarksville Cherty Silt Loam	30-50%
CkC	Coulstone and Clarksville Cherty Soil	2-9%
CkF	Coulstone and Clarksville Cherty Soil	14-30%
Et	Elsah Certy Loam	1-2%
LhB	Lebanon and Hobson Silt Loam	2-5%
NcB	Nixa-Clarksville Cherty Loam	2-5%
NcC	Nixa-Clarksville Cherty Loam	5-9%
NcD	Nixa-Clarksville Cherty Loam	9-14%
W	Water	

Figure 3.4 Soil Map of Drainage Area

residential can be determined from several sources such as topographic maps, tax reassessment photographs, and Agricultural Stabilization and Conservation Service (ASCS) aerial photographs.

For large watersheds, it is advisable to divide the drainage area into subbasins on the basis of size, drainage pattern, existing and proposed facilities, vegetation, and soil and cover types. The subbasin hydrographs are channel routed downstream to the reservoir. Upstream dams and reservoirs may be included in the analysis. Any upstream dam that is found to overtop during the spillway design flood must either be considered to breach or omitted from the analysis. Breaching is assumed to commence when the reservoir exceeds the lowest elevation on the crest of the dam. The breach hydrograph is then routed downstream and added to the inflow hydrograph at the next reservoir. It is advisable to calibrate the spillway design flood results to historical flood events where adequate stream gage data are available. However, most small watersheds in Missouri are not gaged.

The USGS now has 7 1/2 minute topographic maps for the entire state of Missouri. These can be purchased from commercial businesses or ordered from Department of Natural Resources, Maps and Publications, P.O. Box 250, Rolla Missouri 65401; Phone (314) 364-1752. Watershed and subbasin areas should be determined by use of mechanical planimeters or electronic digitizers. Several area measurements should be taken to determine the value to use in the hydrological computations.

D. Initial Abstraction and Infiltration

Initial abstraction consists of the sum of interception, depression storage, and infiltration which occurs prior to runoff. After runoff begins, infiltration continues throughout the duration of the rainfall event.

Interception and depression storage are intended to represent the surface storage of water by trees, grass, and local depressions in the ground surface. These important hydrologic processes must be carefully considered in models which are used to describe the hydrology of a watershed.

Several empirical infiltration models have been developed but few include procedures for estimating interception and depression storage losses. Recognizing this problem, the SCS (1972) developed the curve number method which can be used to estimate runoff from small agricultural watersheds. In view of the general lack of available data pertaining to abstractions during storm events, the SCS curve number method is used by the staff of the Dam and Reservoir Safety Program to determine both initial abstraction and infiltration losses. If other infiltration models are used, the engineer should estimate the interception and depression storage losses based on a review of available soil and cover data.

In order to use the SCS curve number method to estimate the initial abstraction for a subbasin, an area weighted runoff curve number, CN, should be computed. The factors that determine the runoff curve number are the hydrologic soil group, land use, hydrologic condition and the antecedent moisture condition (AMC).

Hydrologic soil groups have been defined by the Soil Conservation Service (1986) for each of the soils in Missouri. They range from A (most permeable) to D (least permeable). The land use addresses the type of development in the subbasin. Typical values for CN for various land uses are shown in Tables 3.1, 3.2, and 3.3 (SCS, 1986). The hydrologic condition takes into account the effect of cover and is generally estimated from density and type of plant growth. The reservoir area can either be considered as an impervious area in the model or included in the weighted runoff curve number computations.

The antecedent moisture condition (AMC) is classified into three categories by the SCS (1972) depending on the available moisture capacity of the soil. Antecedent moisture condition II is used by the staff of the Dam and Reservoir Program to determine the weighted runoff curve number for a watershed. The values of CN in Tables 3.1, 3.2, and 3.3 are for AMC II conditions.

When the SCS curve number method is used in the HEC-1 model, the initial abstraction is computed for each subbasin by using the empirical relationship (SCS, 1972):

$$I_a = 0.2\left(\frac{1000}{CN} - 10\right) \qquad (3.1)$$

This relationship was developed by the SCS to estimate initial abstraction and is an approximation based upon a scattering of rainfall-runoff data for watersheds less than 10 acres in size.

Infiltration is defined as the entry of water from the surface into the soil profile. It is an important hydrologic process which must be carefully considered in the hydrology of a watershed. Several factors affect infiltration. These include soil properties, the initial water content, rainfall rates, surface sealing and crusting, layered soils, and the porosity of the soil. Many empirical and physical models are available to estimate the infiltration rate.

The SCS method is typically used to determine the infiltration rate after the initial abstraction has been satisfied. Direct runoff is computed by the HEC-1 model in the following manner:

$$Q = \frac{(P - 0.2S)^2}{P + 0.8S}, \qquad (3.2)$$

where

Q = incremental direct runoff in inches;
P = incremental storm rainfall, in inches; and
S = (1000/CN) - 10.

The actual infiltration in any increment of time is equal to $P - I_a - Q$.

E. Unit Hydrographs

Unit hydrographs are used in the planning and design of water control structures. Chow (1964) defined the unit hydrograph of a drainage basin as a hydrograph of direct runoff resulting from 1 inch of effective rainfall generated uniformly over the basin area at a uniform rate during a specified period of time or duration.

Because most watersheds are ungaged, the use of synthetic unit hydrographs is an accepted procedure in the computation of inflow hydrographs into a reservoir. Synthetic unit hydrographs are based on the assumption that watersheds within a homogeneous region have similar rainfall-runoff characteristics. Although this is not the most accurate procedure to use, the lack of gaged data makes the use of synthetic unit hydrographs necessary.

The two most commonly used synthetic unit hydrograph methods in Missouri are the SCS dimensionless unit hydrograph and Gray's (1961) unit hydrograph. The SCS method is shown in Figure 3.5 and is included in many of the commonly used computer models. It is typically used on small watersheds. According to Technical Release 60 (SCS, 1985), the SCS unit hydrograph is valid on watersheds up to 50 square miles in size. Larger watersheds should be divided into subbasins with areas less than 20 square miles. Gray's method was developed using data for the midwestern United States. This unit hydrograph is applicable for watersheds up to 94 square miles. Both methods are acceptable for dam safety analysis.

TABLE 3.1

Runoff Curve Numbers - Urban Areas

Cover Description Cover type and hydrologic condition[1]	Ave % Impervious[2]	Curve Numbers[3] for Hydrologic Soil Group A	B	C	D
Open space (lawns, parks, golf courses, cemeteries, etc):					
Poor condition (grass cover < 50%)		68	79	86	89
Fair condition (grass cover 50% to 75%)		49	69	79	84
Good condition (grass cover > 75%)		39	61	74	80
Impervious areas:					
Paved streets, roads, parking lots, roofs, driveways, etc.	100	98	98	98	98
Paved; open ditches (including right of way)		83	89	92	93
Gravel (including right of way)		76	85	89	91
Urban districts:					
Commercial and business	85	89	92	94	95
Industrial	72	81	88	91	93
Residential districts by average lot size					
1/8 acre or less (town houses)	65	77	85	90	92
1/4 acre	38	61	75	83	87
1/3 acre	30	57	72	81	86
1/2 acre	25	54	70	80	85
1 acre	20	51	68	79	84
2 acres	12	46	65	77	82

[1]Average runoff condition, and $I_a = 0.2S$.

[2]The average percent impervious area shown was used to develop the composite CN's.

[3]AMC II conditions.

TABLE 3.2

Runoff Curve Numbers - Agricultural Lands[1]

Land use	Treatment or Practice[2]	Hydrologic Condition[3]	Curve Numbers[4] for Hydrologic Soil Group A	B	C	D
Fallow	Bare soil	----	77	86	91	94
	Crop residue cover (CR)	Poor	76	85	90	93
	Crop residue cover (CR)	Good	74	83	88	90
Row Crops	Straight row	Poor	72	81	88	91
	Straight row	Good	67	78	85	89
	Straight row & CR	Poor	71	80	87	90
	Straight row & CR	Good	64	75	82	85
	Contoured	Poor	70	79	84	88
	Contoured	Good	65	75	82	86
	Contoured + CR	Poor	69	78	83	87
	Contoured + CR	Good	64	74	81	85
	Contoured + terraces	Poor	66	74	80	82
	Contoured + terraces	Good	62	71	78	81
	Contoured + terraces + CR	Poor	65	73	79	81
	Contoured + terraces + CR	Good	61	70	77	80
Small Grain	Straight row	Poor	65	76	84	88
	Straight row	Good	63	75	83	87
	Straight row & CR	Poor	64	75	83	86
	Straight row & CR	Good	60	72	80	84
	Contoured	Poor	63	74	82	85
	Contoured	Good	61	73	81	84
	Contoured + CR	Poor	62	73	81	84
	Contoured + CR	Good	60	72	80	83
	Contoured + terraces	Poor	61	72	79	82
	Contoured + terraces	Good	59	70	78	81
	Contoured + terraces + CR	Poor	60	71	78	81
	Contoured + terraces + CR	Good	58	69	77	80

[1]Average runoff condition, and $I_a = 0.2S$.

[2]Crop residue cover applies only if residue is on at least 5% of the surface throughout the year.

[3]Hydrologic condition is based on combination of factors that affect infiltration and runoff, including (a) density and canopy of vegetation, (b) amount of year-round cover, (c) amount of grass or close-seeded legumes in rotations, (d) percent of residue cover on the land surface (good $\geq$ 20%), and (e) degree of surface roughness.

Poor: Factors impair infiltration and tend to increase runoff.

Good: Factors encourage average and better than average infiltration and tend to decrease runoff.

[4]AMC II conditions

TABLE 3.3

Runoff Curve Numbers - Noncultivated Agricultural Lands

Cover Type	Hydrologic Condition[1]	Curve Numbers[2] for Hydrologic Soil Group A	B	C	D
Pasture, grassland, or range-continuous forage for grazing[3]	Poor	68	79	86	89
	Fair	49	69	79	84
	Good	39	61	74	80
Meadow--continuous grass, protected from grazing and generally mowed for hay	----	30[4]	58	71	78
Brush--brush-weed-grass mixture with brush the major element.[5]	Poor	48	67	77	83
	Fair	35	56	70	77
	Good	30	48	65	73
Woods--grass combination (orchard or tree farm)[6]	Poor	57	73	82	86
	Fair	43	65	76	82
	Good	32	58	72	79
Woods.[7]	Poor	45	66	77	83
	Fair	36	60	73	79
	Good	30	55	70	77
Farmsteads-buildings, lanes, driveways, and surrounding lots.	----	59	74	82	86

[1]Average runoff condition, and $I_a = 0.2S$.

[2]AMC II conditions

[3]Poor; <50% ground cover or heavily grazed with no mulch.
Fair; 50% to 75% ground cover and not heavily grazed.
Good; >75% ground cover and lightly or only occasionally grazed.

[4]Actual curve number is less than 30; use CN=30 for runoff computations.

[5]Poor; <50% ground cover.
Fair; 50% to 75% ground cover.
Good; >75% ground cover.

[6]CN's shown were computed for areas with 50% woods and 50% grass (pasture) cover. Other combinations of conditions may be computed from the CN's for woods and pasture.

[7]Poor; Forest litter, small trees, and brush are destroyed by heavy grazing or regular burning.
Fair; Woods are grazed but not burned, and some forest litter covers the soil.
Good; Woods are protected from grazing, and litter and brush adequately cover the soil.

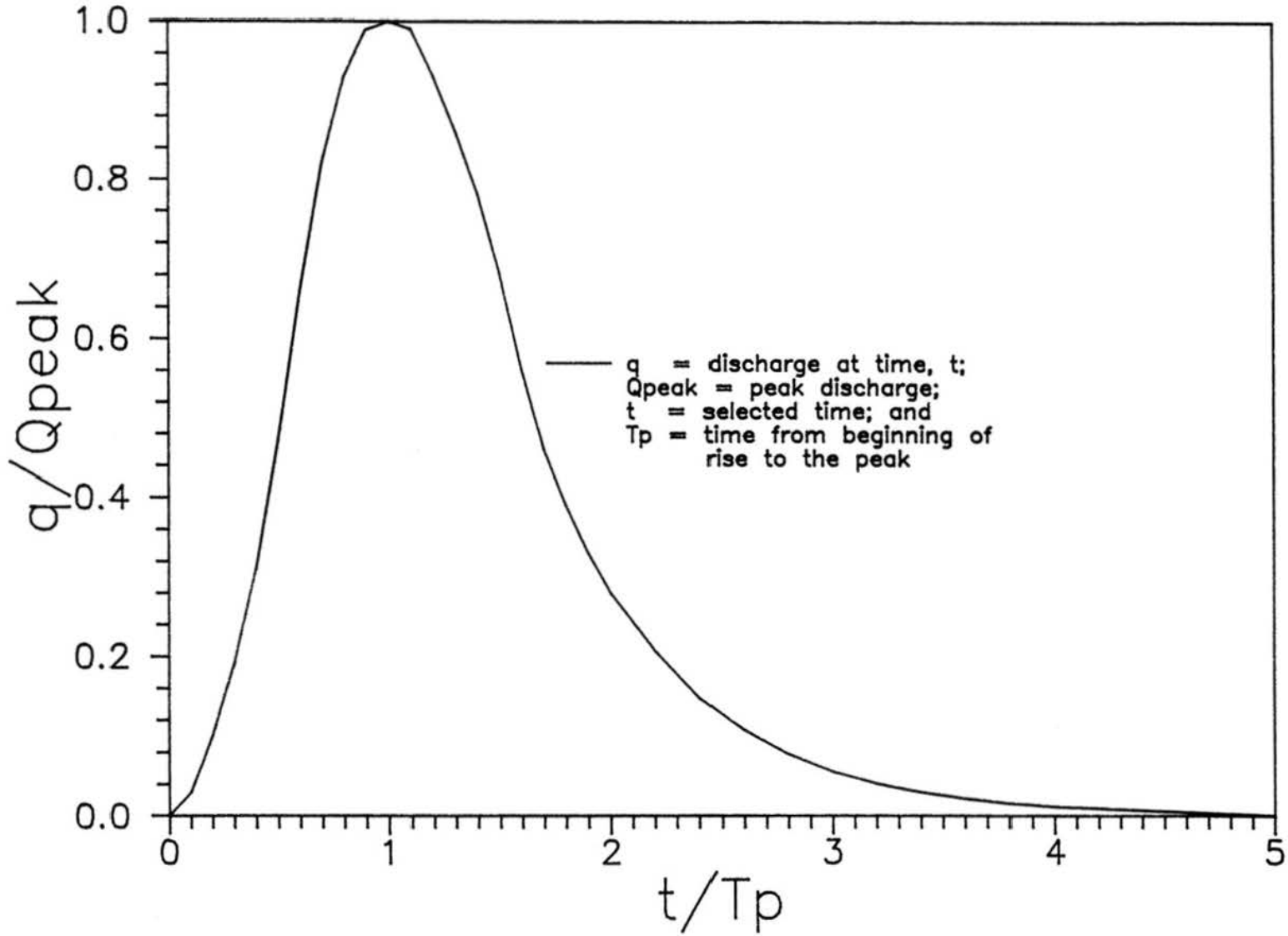

Figure 3.5 SCS Dimensionless Unit Hydrograph

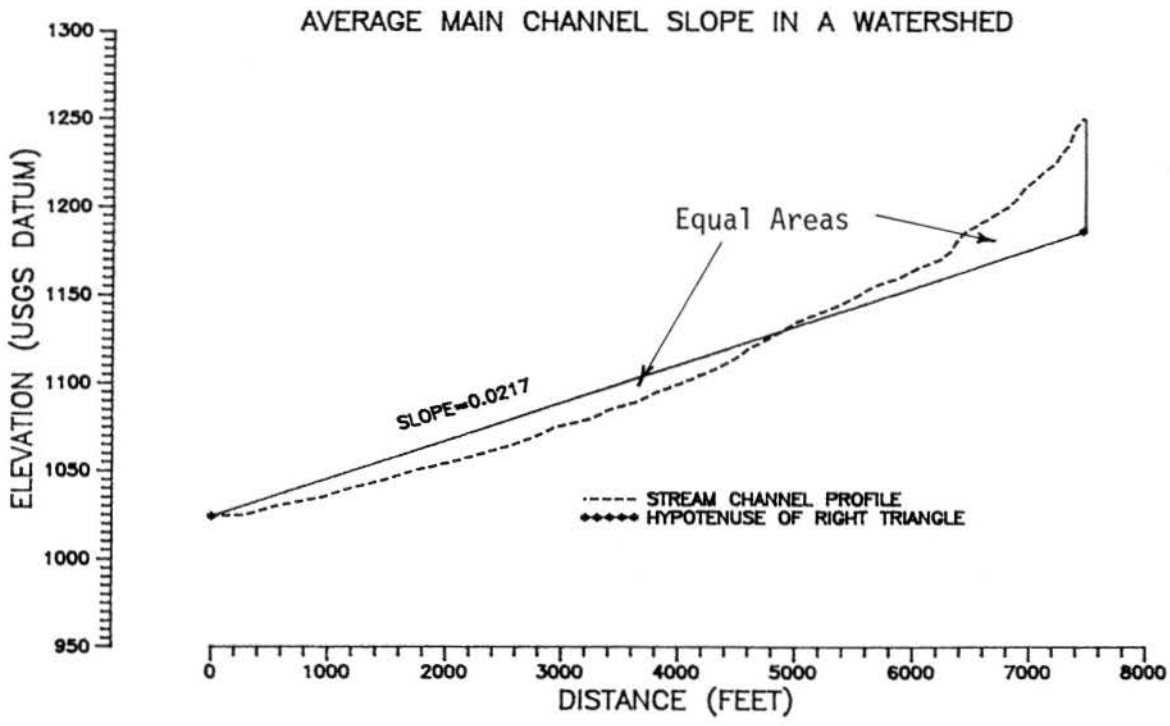

Figure 3.6 Gray's (1961) Method of Computing Channel Slope

The SCS dimensionless unit hydrograph is based upon empirical observations of how natural watersheds "typically" respond to rainfall in excess of the rate at which it can infiltrate. A good description of the method is included in the SCS (1972) National Engineering Handbook, Section 4, Hydrology. The basic input parameters needed to develop a synthetic unit hydrograph for a watershed include the basin lag time, basin area, and the duration of the unit hydrograph. Time to peak, T_P, and the peak flow, Q_{peak}, for each increment of rainfall are computed from these three parameters.

The basin lag time, T_L, should be computed before the unit hydrograph duration, ΔD, is specified. The SCS dimensionless unit hydrograph is based on the relationship, $\Delta D = 0.22T_L$. According to the SCS, a small variation in ΔD is permissible, however, ΔD should not be greater than 0.25 T_P. This SCS guideline lead the Corps of Engineers to recommend the relationship in Equation 3.3 for selecting the HEC-1 computation interval, Δt.

$$\Delta t \leq .29T_L, \qquad (3.3)$$

where

Δt = HEC-1 computation interval in minutes; and

T_L = basin lag time in minutes.

Selection of the HEC-1 computation interval is very important because it is also the duration of the SCS dimensionless unit hydrograph.

In Gray's unit hydrograph, a gamma distribution is used to describe a dimensionless unit hydrograph. The length and slope of the main channel upstream of the reservoir and the watershed area are the parameters used to develop the synthetic unit hydrograph. These parameters can easily be obtained from a topographic map. Channel slope is determined as shown in Figure 3.6. The area beneath the channel profile is set equal to the area of a right triangle with the hypotenuse crossing the origin at the elevation of the reservoir. The slope of the hypotenuse is the average channel slope. Gray's unit hydrograph can be computerized to solve for the Unit Hydrograph Ordinates based on an input of watershed area, channel length, and channel slope. A good description of the method is presented by Viessman, Harbaugh, and Knapp (1972).

F. Time of Concentration

The use of synthetic unit hydrographs requires a characterization of watershed response time. This characteristic time is usually taken to be either time of concentration or basin lag time. Both are commonly assumed to be constant and lag time is often considered to be a fraction

of time of concentration so that one is easily converted to the other. Lag time must be computed in order to use the SCS dimensionless unit hydrograph. With Gray's unit hydrograph, the time of concentration is implicitly computed in the determination of the hydrograph ordinates.

The SCS (1972) defined lag time as the time interval between the centroid of effective rainfall and the peak of direct runoff. When used with the SCS unit hydrograph, this definition assumes that lag time is stable and is constant regardless of rainfall duration or intensity. This assumption of linearity is made to simplify computations. Based on their experience on small watersheds, the SCS estimates lag time as

$$T_L = 0.6 T_c, \tag{3.4}$$

where

T_C = time of concentration in minutes.

A number of empirical approaches to estimating basin response time have come to be accepted in the field of hydrology for dam safety. Among the most common are the Kirpich formula (1940), the Kerby-Hathaway formula (Kerby, 1959), the SCS Upland method, and the SCS Lag method (SCS, 1985). The SCS methods and the Kerby-Hathaway method consider surface roughness and all four methods recognize the importance of length and slope of the flow path. None of these methods, however, reflect the influence of rainfall characteristics such as rainfall duration and intensity.

The Kirpich formula was developed from data gathered by Ramser (1927) from experiments conducted on a single 112 acre agricultural watershed in Tennessee. The equation is

$$T_c = 0.00013 L^{.77} S^{-.385}, \tag{3.5}$$

where

T_C = time of concentration in hours;
L = length of the watershed in feet; and
S = slope in feet/feet.

A version of the Kirpich formula is printed in the U. S. Department of of the Interior (1974) manual entitled Design of Small Dams.

The SCS Lag method is shown in Equation 3.6 and is based on the assumption that the time of concentration equals 1.67 times the lag time. It can be used on watersheds up to 2000 acres in size.

$$T_c = 0.000879 L^{.8} \left(\frac{1000}{CN} - 9 \right)^{.7} Y^{-.5}, \tag{3.6}$$

where

T_C = time of concentration in hours;
L = hydraulic length of the watershed in feet;
CN = hydrologic soil cover complex no.; and
Y = average watershed land slope, %.

The slope in Equation 3.6 is the average land slope, not the channel slope. It is typically computed from topographic maps and SCS soil survey maps. Horton (1932) published three methods of computing overland slope which are frequently used. These include the contour area method, the mean slope method, and the intersection line method.

The contour area method requires that areas be planimetered between each successive pair of contour lines in a subbasin. Each area is divided by the average contour length for the interval being considered to compute the average distance between contours as shown in Equation 3.7.

$$L_i = \frac{A_i}{\frac{L_1 + L_2}{2}}, \tag{3.7}$$

where

L_i = average distance between contours;
A_i = intermediate area;
L_1 = length of first contour; and
L_2 = length of second contour.

The overland slope of the subbasin is then computed as

$$S_o = \sum \frac{(A_i D)}{A_T L_i}, \tag{3.8}$$

where

S_O = overland flow slope;
D = contour interval; and
A_T = subbasin area.

The mean slope method is a simplified form of the contour area method because it considers the subbasin as a whole. The total length of contours in the subbasin is determined and the mean slope is computed by Equation 3.9.

$$S_o = \frac{D \sum L}{A_T}, \tag{3.9}$$

where

$\sum L$ = total length of contours.

According to Horton (1932), the mean slope method gives good results if the relief is moderate and contours are spaced uniformly.

An average watershed slope can also be computed by weighting the average slopes from the SCS soil map shown in Figure 3.4.

The SCS (1985) Upland Method, shown in Equation 3.10, was developed primarily for flow in upland areas which include overland flow and flow through grassed waterways, paved areas, and small upland gullies.

$$T_c = \frac{L}{3600V}, \qquad (3.10)$$

where

T_C = time of concentration in hours;
L = channel length in feet; and
V = velocity of full bank flow in feet/second.

Travel times for each mode of upland flow and land use are computed from a graph of experience curves (SCS, 1972) showing velocity versus slope for various ground cover conditions. The summation of these travel times equals the time of concentration in the watershed. This method is limited to watersheds less than 2000 acres.

Huggins and Burney (1982) suggested computing time of concentration by adding the channel travel time from the Kirpich equation and the overland flow travel time from the Kerby-Hathaway equation. The basis for the Kerby-Hathaway formula, shown in Equation 3.11, is a study conducted by Hathaway (1945) on overland flow for airfield design and construction.

$$T_c = 0.01377\, L_o^{.47} n^{.47} S_o^{-.235}, \qquad (3.11)$$

where

T_C = time of concentration in hours;
L_O = overland flow length;
n = roughness factor; and
S_O = overland flow slope in feet/feet.

When using this method, overland flow lengths should be limited to 500 feet. The roughness factor, n, has the same meaning for overland flow as it does for channel flow, but it is typically higher (0.1 - 0.4) due to the combined resistance effects of the overland flow surface. Kerby (1959) suggested the following values:

TYPE OF SURFACE	n
Smooth impervious surface	.02
Smooth, bare, packed soil	.10
Poor grass, cultivated row crops, or moderately rough bare surface	.20
Pasture or average grass	.40
Deciduous timberland	.60
Conifer timberland, deciduous timberland with deep forest litter, or dense grass	.80

Engman (1986) analyzed data from experimental plots and recommended roughness coefficients of 0.13 for range grass, 0.24 for dense grass, 0.41 for Bermuda grass and 0.45 for bluegrass sod.

This last method, which combines the time of concentration values obtained from the Kirpich and Kerby-Hathaway formulas, is the method generally used by the staff of the Dam and Reservoir Safety Program.

All four methods are acceptable for dam safety analysis, but none of them consider the affects of rainfall. Swenty (1989) conducted a study which showed that lag time is affected by rainfall duration, depth, and intensity. He concluded that the traditional approach of combining the overland and channel flow lag times from the Kerby-Hathaway and Kirpich equations yields reasonable estimates of basin lag time for 100% PMP events on basins less than 1 square mile in size. All four methods were found to underestimate basin lag time for 6-hour and 12-hour rainfall events, less than the 100% PMP.

G. Rainfall Hyetographs

In order to compute an inflow hydrograph, the spillway design flood precipitation value must be distributed over the duration of the rainfall event. Methods are included in the SCS (1974) National Engineering Handbook No. 4 (NEH-4), the U. S. Department of the Interior (1974) Design of Small Dams, and the U. S. Army Corps of Engineers (1987) Flood Hydrograph Package, HEC-1, but the distributions used by the Dam and Reservoir Safety Program are those developed by Huff (1980). Huff published four rainfall distributions for various duration rainfall events. The data used to derive these rainfall distributions were acquired from gaging stations in the state of Illinois. Because of Missouri's close proximity to Illinois, these distributions are acceptable for dam safety projects in Missouri.

The average time distribution of heavy rainfall at a point is shown in Table 3.4 (Huff, 1980). Huff recommended that the point time-distribution relationships shown in Table 3.4 be used with PMP rains extending from a point to 50 square miles.

First and second quartile rainfall distributions should be used for rainfall events less than 12 hours, third quartile rainfall distributions should be used for rainfall durations of 12 to 24 hours and fourth quartile rainfall distributions would be used for rainfall durations greater than 24 hours. Distributions for areas from 50 to 400 square miles were also derived by Huff (1980).

Huff's distributions can also be used to distribute the 50-year and 100-year rainfall events. These rainfall events are typically used to design emergency spillways and to analyze the affect of proposed spillway modifications on discharge rates.

H. Inflow Hydrograph Computation

The inflow design flood hydrograph represents direct runoff from precipitation in the form of rain over a watershed. If hand computations are performed, the procedure outlined in Table 3.5 is recommended.

This procedure should be followed for each duration rainfall event that is analyzed. For a typical small watershed, both a 6-hour and a 12-hour inflow hydrograph will have to be computed. Larger watersheds will require the analysis of longer duration events.

TABLE 3.4 Median Time Distributions of Heavy Storm Rainfall at a Point

Cumulative storm rainfall (percent) for given storm type

Cumulative storm time (percent)	First-quartile	Second-quartile	Third-quartile	Fourth-quartile
5	16	3	3	2
10	33	8	6	5
15	43	12	9	8
20	52	16	12	10
25	60	22	15	13
30	66	29	19	16
35	71	39	23	19
40	75	51	27	22
45	79	62	32	25
50	82	70	38	28
55	84	76	45	32
60	86	81	57	35
65	88	85	70	39
70	90	88	79	45
75	92	91	85	51
80	94	93	89	59
85	96	95	92	72
90	97	97	95	84
95	98	98	97	92

TABLE 3.5

Procedure for Computing an Inflow Hydrograph

Step 1	Determine the size of the drainage area of each basin for which an inflow hydrograph is to be computed.
Step 2	For watersheds less than 10 square miles, determine the PMP values for 6-hour, 12-hour and 24-hour events. For larger watersheds, adjust the PMP value as described in Section B and include 48-hour and 72-hour duration events.
Step 3	Compute the time of concentration for the drainage basin and convert to lag time.
Step 4	Using the lag time, compute the computational time interval, Δt, where $\Delta t \leq 0.29$(lag time).
Step 5	Determine the downstream environmental zone and select the appropriate design precipitation value from Table 5, 10 CSR 22-3.020.
Step 6	Determine the rainfall hyetograph by using Huff's Quartile distributions in Table 3.3. Sum the ordinates to compute an accumulative design rainfall table.
Step 7	Determine the initial abstraction and construct an infiltration model for the watershed. Compute the amount of excess rainfall at each time step. If the SCS curve number method is used, determine the hydrologic soil cover complex number, CN, of the watershed and perform steps 8 and 9.
Step 8	Determine the accumulative direct runoff from Equation 3.2.
Step 9	Convert the accumulative direct runoff table to an incremental table of direct runoff.
Step 10	Construct a synthetic unit hydrograph for the basin.
Step 11	Compute hydrographs for each time increment using the synthetic unit hydrograph (step 10) and either the excess rainfall at each time step (step 7) or the incremental table of direct runoff (step 9). Overlay hydrographs and add ordinates at each time increment. The summation of all ordinates produces the inflow hydrograph to the reservoir.

ERRATA SHEET FOR "ENGINEERING ANALYSIS OF DAMS MANUAL"
November 14, 1991

Page 18, Table 3.5, Step 6, should read,

Determine the rainfall hyetograph by using Huff's Quartile distributions in Table 3.4. Sum the ordinates to compute an accumulative design rainfall table.

Page 20, definition of term D_{rc} in second column should read,

D_{rc} = diameter of riser in ft.

Page 24, Table 4.1 should read,

TABLE 4.1

Geometric Elements of Trapezoidal Channels

Geometric Element	Symbol	Definition	Equation
Water Area	A	Cross sectional area of the flow normal to the direction of flow	$(b+zy)y$
Wetted Perimeter	P	Length of the line of intersection of the channel wetted surface with a cross sectional plane normal to the direction of flow.	$b+2y\sqrt{1+z^2}$
Hydraulic Radius	R	Ratio of the water area to its wetted perimeter.	$\frac{(b+zy)y}{b+2y\sqrt{1+z^2}}$
Top Width	T	Width of the channel section at the free surface.	$b+2zy$
Hydraulic Depth	D	Ratio of the water area to the top width.	$\frac{(b+zy)y}{b+2zy}$
Section Factor	Z	Product of the water area and the square root of the hydraulic depth.	$\frac{[(b+zy)y]^{1.5}}{\sqrt{b+2zy}}$

Note y = depth of flow in channel

b = channel base width.

z = sideslope of channel, z:1.

Page 29, the conic method equation in column two should read,

The conic method can be used to compute reservoir volume from surface area versus elevation data as follows:

$$\Delta Vol = \frac{(E_{n+1} - E_n)}{3}(A_n + A_{n+1} + \sqrt{A_n A_{n+1}})$$

Page 35, Figure 5.4

"Relief wall" should be "Relief well"

CHAPTER IV

HYDRAULIC CONSIDERATIONS

The hydraulic calculations that are performed in a dam safety analysis involve the principles of fluid mechanics, and the laws of continuity, conservation of momentum, and specific energy. Many dams have a combination of closed conduit spillways, open channel spillways, and gates and valves for water supply and other uses. It is important that the engineer be familiar with the principles of hydraulic engineering in order to determine the capacity of these spillways.

After the spillways are rated, an overtopping analysis can be conducted. In order to perform an overtopping analysis, the inflow hydrograph must be routed through the reservoir to determine the maximum water surface elevation during the spillway design flood (SDF). This information not only determines whether a dam can safely pass the SDF; it also defines the maximum reservoir loading condition for the slope stability analysis. The purpose of this section is to provide the engineer with the techniques commonly employed by the staff of the Dam and Reservoir Safety Program to perform these computations.

A. Closed Conduit Hydraulics

Closed conduit spillways can either be single structures, such as culverts, or systems consisting of an inlet structure, a closed discharge pipe and an outlet structure. One advantage of this type of spillway is that near maximum capacity is attained at relatively low heads. This characteristic makes the spillway ideal for use where the maximum spillway outflow is to be limited. A disadvantage of conduit spillways is that there is little increase in capacity at higher reservoir levels.

1. Design Considerations for Conduit Spillways

On new dams and modifications to existing dams, the inlet structure should be designed to establish full pipe flow at as low a head as practical and to operate without excessive surging, vibration, or vortex action. This requires the inlet to have a larger cross-sectional area than the main conduit or ventilation.

Trash racks should be placed on inlet risers to exclude trash too large to pass freely through the spillway and outlet structure. General criteria for trash racks is included in the booklet, Maintenance, Inspection, and Operation of Dams in Missouri.

Conduits under earth embankments must support the external loads with an adequate factor of safety. They must withstand the internal hydraulic pressure without leakage under full external load and settlement and convey water at the design velocity without damage to the interior surface of the conduit. The material used for the conduit should be determined by the size of the dam, the economic life of the dam, and the relative ease of replacement.

Conduits should be designed and constructed to remain watertight under maximum anticipated hydrostatic head and maximum joint extension. The analysis should include the effects of joint deflection caused by settlement of the embankment. Corrugated metal pipes are not recommended for use in dams because banded joints are not designed for high pressure flow.

Piping and seepage control around the conduit is an important consideration. For many years, anti-seep collars were required on conduits passing through earth embankment dams. Although no longer used in all dams, anti-seep collars are still an acceptable method for seepage control. When used, the anti-seep collars should be designed to extend the seepage path by 15 percent through the saturated zone. The major disadvantage of anti-seep collars is that it is difficult to compact soil directly against the concrete structure. A large amount of hand compaction is required. An alternative to anti-seep collars is a granular diaphram (sand filter) around a section of conduit downstream of the core. This method is frequently used by the SCS (1986) and is becoming widely accepted by private engineers.

When spillway flows drop from the reservoir pool level to the downstream outlet channel level, the static head is converted to kinetic energy. This energy manifests itself in the form of high velocities, which, if not impeded, results in erosion. Means of returning the flow to the river without serious scour or erosion to the toe of the dam or damage to adjacent structures must be provided. Types of outlet structures include cantilever outlets combined with plunge pools, Saint Anthony Falls (SAF) basins, and impact basins.

2. Shaft Spillways

A shaft spillway is an uncontrolled spillway in which the water enters over a weir and drops through a vertical or sloping shaft into a conduit which discharges into the downstream channel.

The drop-inlet and the morning-glory are the two most common shaft spillways. The drop-inlet spillway is normally a concrete cast-in-place box or a circular sharp crested weir constructed from precast concrete pipe. Figure 4.1 shows a profile of a drop inlet spillway. The morning-glory spillway is a special case of the circular sharp crested weir in which the shape of the weir crest and the upper portion of the shaft are designed to follow the trajectory of the lower nappe.

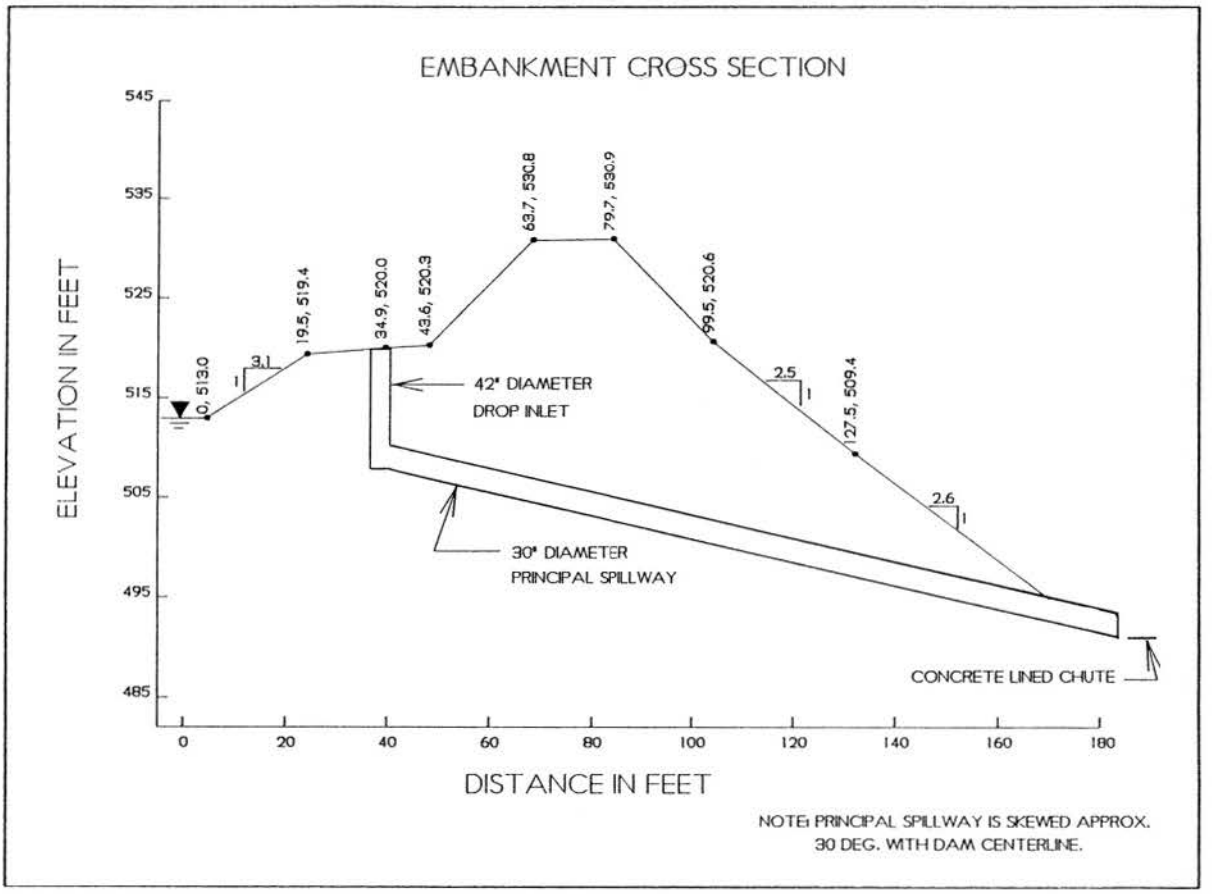

Figure 4.1 Profile of a Drop Inlet Spillway

This section discusses the hydraulic characteristics and the design for a drop-inlet spillway. A discussion of the morning-glory spillway can be found in Design of Small Dams.

The discharge characteristics of a shaft spillway are determined by that portion of the structure which is controlling the discharge. It can be seen in Figure 4.2 that there is the potential for as many as three separate controls and thus three distinct sections in the elevation discharge curve.

The first form of control is weir flow which is described by the weir equation:

$$Q = C_w L_w H^{1.5}, \qquad (4.1)$$

where

Q = discharge in cfs;
C_W = weir coefficient;
L_W = perimeter length of weir in ft.; and
H = depth of water over the weir in ft.

The Portland Cement Association (1964) list the following equations for determining the weir coefficient, C_W, for rectangular drop inlets as a function of the level of the reservoir and the diameter of the outlet pipe:

$$C_w = 3.38\left(1 - \frac{1}{250\frac{H}{D}}\right)^{1.5} \; for \; \frac{Q}{D^{2.5}} < 4, \qquad (4.2)$$

$$C_w = 4.1\left(1 - \frac{1}{16.7\frac{H}{D}}\right)^{1.5} \; for \; \frac{Q}{D^{2.5}} > 4, \qquad (4.3)$$

where

H = headwater depth above the inlet in ft.; and
D = diameter of the outlet pipe in ft.

The weir coefficient, C_W, for circular drop inlets is given in Equation 4.4:

$$C_w = 3.60\left(1 - \frac{0.013}{H/D_{rc}}\right)^{1.5}, \qquad (4.4)$$

where

D_{rc} = diameter or riser in ft.

The transition point between weir and orifice flow occurs when the contraction of the flow is fully developed

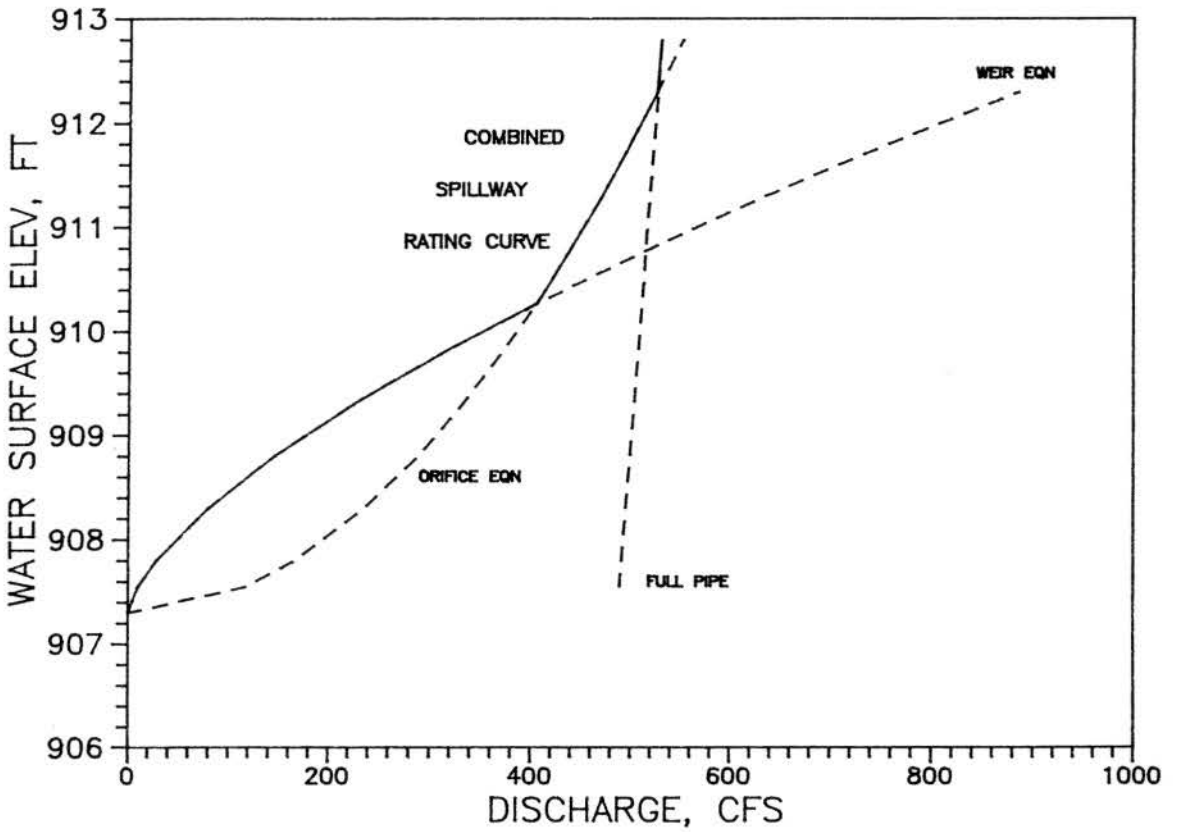

Figure 4.2 Combined Spillway Rating Curve for a Conduit Spillway

at the inlet. The second form of control that must be considered is orifice flow which is discribed in Equation 4.5:

$$Q_o = C_o A\sqrt{(2gH)}, \qquad (4.5)$$

where

Q_O = discharge in cfs;
C_O = contraction coefficient;
A = cross sectional area of inlet in ft^2; and
H = head in feet.

The head is normally taken to be the elevation difference between the top of the inlet and the reservoir surface.

When the depth of water in the vertical riser is above the critical depth for weir flow, the drop inlet will be submerged. Flow is then determined by the relationship in Equation 4.6:

$$Q_p = A_p\sqrt{\frac{2gH_t}{K_c + K_o + \frac{fL}{D}}}, \qquad (4.6)$$

where

Q_p = discharge through pipe in cfs;
A_p = cross sectional area of pipe in square ft;
H_t = total head measured from the headwater surface in the riser to the crown of the pipe outlet in ft;
K_C = total entrance losses, dimensionless coefficient;
K_O = total outlet losses, dimensionless coefficient;
f = Darcy-Weisbach friction factor;
L = length of pipe in feet; and
D = diameter of pipe in feet.

This equation ignores the effect of friction in the riser which, for short risers, is insignificant. Loss coefficients for expansions, contractions, bends, gates, and trashracks are contained in Design of Small Dams. Simon (1986) also provided a good discussion of various loss coefficients.

Figure 4.3 contains a form that can be used to tabulate flow rates under weir, orifice, and full pipe flow conditions. Q_{TOTAL} is determined at each elevation bt taking the minimum of Q_W, Q_O, and Q_P.

This section has not included siphon flow. Unless properly designed to withstand negative pressures, a conduit can be severely damaged by repeated occurrences of siphon flow. A brief explanation of siphon flow follows.

When air is purged from the discharge conduit, large, nearly instantaneous increases in the discharge occur. As the inlet becomes submerged, the high turbulence at the base entrains air and removes portions of the trapped air from the inlet. The pressure inside the inlet becomes negative and creates a pressure differential across the inlet. This is turn increases the discharge through the inlet. The

NAME OF DAM _____ DATE _____

(MO) COUNTY _____ ENGR _____

PIPE CALCULATIONS

ELEV.	H_1	Q_w	Q_o	H_2	Q_p	Q_{Total}

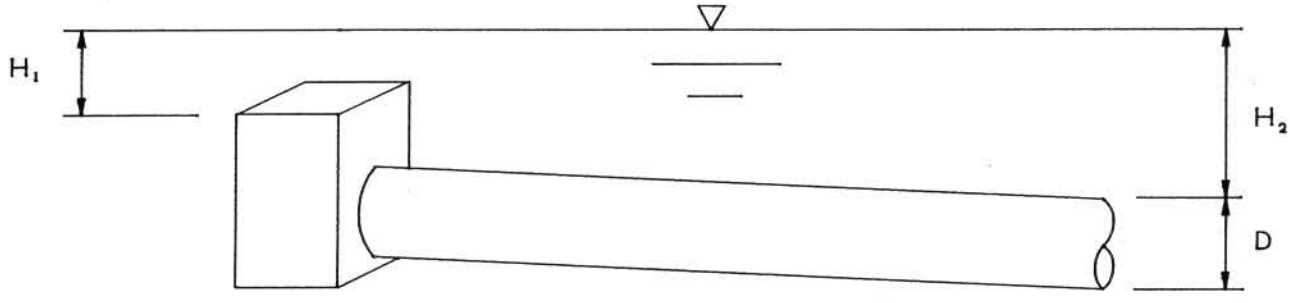

Weir Flow

$$Q_w = C_w L_w H_1^{1.5}$$

Orifice Flow

$$Q_o = C_o A_o \sqrt{2gH_1}$$

Full Pipe Flow

$$Q_p = A_p \sqrt{\frac{2gH_2}{\sum k + \frac{fL}{D}}}$$

C_w = _____ weir coefficient
L_w = _____ weir length of inlet, ft.
H_1 = _____ reservoir elev - inlet elev, ft
C_o = _____ orifice coefficient
A_o = _____ cross sectional area of inlet, ft^2
H_2 = _____ total head at pipe outlet, ft
$\sum k$ = _____ summation of inlet, bend and outlet losses
f = _____ Darcy Weisbach friction factor
A_p = _____ cross sectional area of pipe, ft^2
D = _____ diameter of pipe, ft^2
L = _____ length of pipe, ft

VALUES USED IN ANALYSIS

C_w =
L_w =
H_1 =
C_o =
A =
H_2 =
K =
f =
A_p =
D =
L =

Figure 4.3 Conduit Spillway Calculation Form

increased discharge causes the driving head (the depth of water in the inlet) to increase and increases the discharge through the outlet conduit. During this process the unsteady nature of the flow causes waves to travel down the conduit. Usually a wave will seal the conduit. The large negative pressure created by the wave will cause the system to siphon and flow full. The discharge increases abruptly as the flow jumps from inlet to outlet control. Dynamic pressures are created throughout the system. Unless the reservoir rises rapidly, vortexes and other disturbances at the inlet will bring air into the system, break the siphon, and start the cycle over.

Sometimes the siphon action only partially occurs. As the system begins to siphon, the driving head is drawn down in the inlet. The wave, which had sealed the conduit, allows air back up the conduit. The driving head quickly rises and forces the trapped air in the inlet up and through the top "belching" out into the atmosphere. The water at the inlet quickly replaces the belched air as it passes out, and falls into the inlet as a slug causing dynamic pressure surges. These surges can cause damaging vibration throughout the system. Measures must be taken to avoid this problem and insure the proper operation of the system.

3. Culvert Spillways

A culvert spillway ordinarily consists of a simple culvert conduit placed through the dam or along the abutment, generally on a uniform grade with the entrance placed vertically or inclined. The culvert cross section may be round, rectangular, square, or some other shape. Usually, prefabricated pipe materials such as concrete or PVC are utilized.

The factors which combine to determine the nature of flow in a culvert spillway include slope, size, shape, length, roughness of the conduit barrel, and the inlet and outlet geometry. The combined effect of these factors determines the location of the control which in turn determines the discharge characteristics of the conduit. The location of the control dictates whether the conduit flows partly full or full and thereby establishes the head-discharge relationship.

Many nomographs and graphs have been developed for standard size pipe and box culverts. The staff of the Dam and Reservoir Safety Program uses Hydraulic Engineering Circular No. 10 published by the U.S. Department of Transportation (1972) to rate most culverts. Another good reference is Hydraulic Engineering Circular No. 5 published by the U.S. Department of Transportation (1965). Nomographs for determining flow in circular pipes are also included in the appendix of Design of Small Dams.

4. Flow under Bridges

In most cases, flow under bridges should be determined by performing a backwater analysis of the channel over which the bridge is located. However, in some cases, a single span bridge will pass flow as an orifice under low heads.

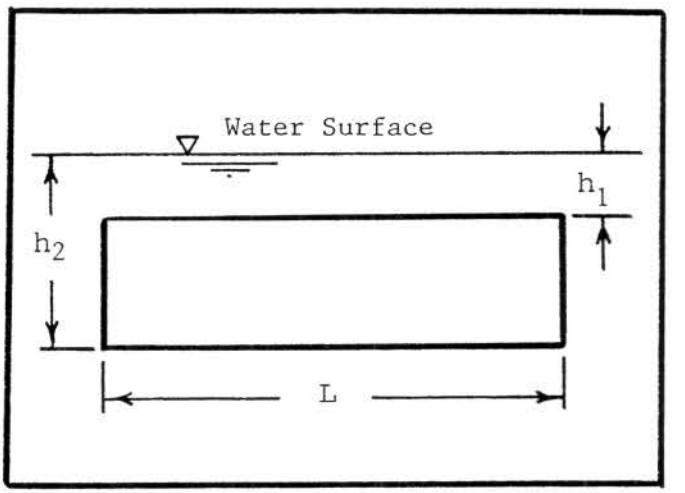

Figure 4.4 Flow Through a Rectangular Orifice

When the head on a vertical orifice is small in comparison with the height of the orifice, there is an appreciable difference between the theoretical discharge and the discharge given by Equation 4.5. Figure 4.4 shows a rectangular orifice of width L and height H. The respective heads on the upper and lower edges of the orifice are h_1 and h_2. Equation 4.7 gives the theoretical discharge for rectangular orifices.

$$Q_t = \frac{2}{3} L \sqrt{2g} (h_2^{1.5} - h_1^{1.5}) \qquad (4.7)$$

When Equation 4.5 is employed for orifices discharging under low heads, the deviation from the theoretical form of the formula must be corrected in the contraction coefficient. Equation 4.7 provides a better means of deriving the rating curve and does not require the estimation of a contraction coefficient.

B. Open Channel Hydraulics

Most dams have open channel principal spillways or emergency spillways which carry the majority of the flow during the design flood. It is important to know how to analyze the capacity of an open channel to determine if a dam will be overtopped. Many open channels have gentle slopes to prevent excessive erosion, but gentle slopes can cause backwater conditions in the channel. Depending on the flow rate, the control can move up or down the channel. Therefore, backwater analyses have to be be performed at several flow rates to determine the capacity of the channel.

TABLE 4.1

Geometric Elements of Trapezoidal Channels

Geometric Element	Symbol	Definition	Equation
Water Area	A	Cross sectional area of the flow normal to the direction of flow	$(b + zy)y$
Wetted Perimeter	P	Length of the line of intersection of the channel wetted surface with a cross sectional plane normal to the direction of flow.	$b + 2y\sqrt{1 + z^2}$
Hydraulic Radius	R	Ratio of the water area to its wetted perimeter.	$\frac{(b+zy)y}{b+2y\sqrt{1+z^2}}$
Top Width	T	Width of the channel section at the free surface.	$b + 2zy$
Hydraulic Depth	D	Ratio of the water area to the top width.	$\frac{(b+zy)y}{b+2zy}$
Section Factor	Z	Product of the water area and the square root of the hydraulic depth.	$\frac{[(b+zy)y]^{1.5}}{\sqrt{b+2zy}}$

Note y = depth of flow in channel

b = channel base width.

z = sideslope of channel, z:1.

An open channel is a conduit in which the flow has a free surface at all times. This contrasts with closed conduit or pipe flow in which the flow is completely enclosed. The free surface is subject to local atmospheric pressure, thus, the hydraulic grade line of a channel coincides with the water surface. This also has the effect of determining the location of the energy grade line since it is one velocity head $V^2/2g$ above the hydraulic grade line. The driving force which causes water to flow in open channels is the action of gravity along the slope of the channel.

Open channel flow may be classified and described in several ways. One such classification uses time as the criterion. Flow is considered to be steady if a parameter such as velocity or depth of flow at a point does not change over some time interval. The flow is unsteady if there is a change with respect to time.

Table 4.1 illustrates some of the common concepts used in open channel hydraulics. Channel sections are taken perpendicular to the direction of flow. The depth of flow, y, is the vertical distance from the lowest point of a channel section to the free surface. The water area, A, is the cross-sectional area of the flow normal to the direction of flow. The top width, T, is the width of the channel section at the surface. The wetted perimeter, P, is the length of the boundary in contact with the bottom and sides of the channel. The hydraulic radius, R, is the area divided by the wetted perimeter. The hydraulic depth, D, is the area divided by the top width, and is the characterictic length in open channels. Equations for these parameters are listed in Chow (1959) for various channel cross sections.

If space is used as the criterion, the flow is uniform if there is no change in velocity or depth along the length of a reach of channel. If a change does occur the flow is varied. Varied flow may be described as gradually or rapidly varied flow. In gradually varied flow, the rate of change of depth and velocity with respect to distance is relatively small so that some of the assumptions of uniform flow can be used for hydraulic calculations. Flow profiles caused by the backwater effect of a reservoir and changes in channel slope are examples of gradually varied flow.

A channel is prismatic if it has constant cross-section and slope over a reach; otherwise it is nonprismatic.

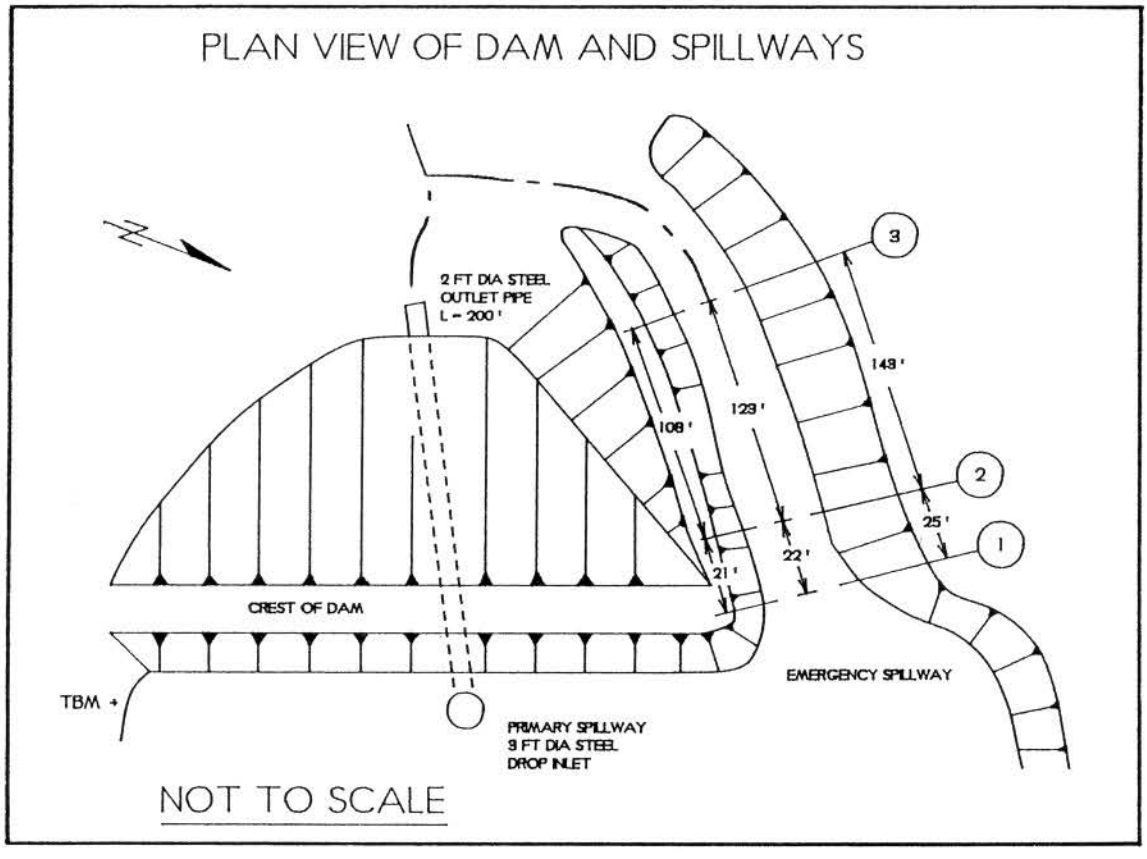

Figure 4.5 Plan View of an Earth Dam and Spillways

1. Water Surface Profiles

When water surface profiles are determined in an open channel spillway, the reservoir surface is assumed to be the elevation of the energy grade line at the upstream most cross section. In surveying an open channel spillway, the engineer should obtain cross sections at several locations both upstream and downstream of the assumed control section. This will ensure that sufficient information will be available to determine the approximate location of the control section. The results of a backwater analysis also allow the engineer to determine if the velocities in the channel are too high and if the training berm is high enough to prevent water from flowing outside the channel. Figure 4.5 shows a typical series of cross sections needed to perform backwater computations.

There are many methods available to compute water surface profiles in an open channel. The staff of the Dam and Reservoir Safety Program utilizes the U.S. Army Corps of Engineers (1982) HEC-2 Water Surface Profiles computer program to perform these calculations. The program calculates water surface profiles for steady gradually varied flow in natural or man-made channels. Both subcritical and supercritical flow profiles can be computed. The effects of various obstructions such as bridges, culverts, weirs, and structures in the channel may be considered in the computations. The computational procedure is based on the solution of the one-dimensional energy equation with energy loss due to friction evaluated with Manning's equation. The computational precedure is generally known as the Standard Step Method.

Figure 4.6 illustrates a short channel reach of length Δx which will be used to explain the basis of the standard step method. Equating the total heads at the two end sections 1 and 2, Equation 4.8 is produced:

$$S_o \Delta x + y_1 + \alpha_1 \frac{V_1^2}{2g} = y_2 + \alpha_2 \frac{V_2^2}{2g} + S_f \Delta x, \qquad (4.8)$$

where

S_o = slope of the channel bottom;
Δx = increment of channel reach;
y = depth of flow;
V = velocity of flow;
g = acceleration of gravity, 32.2 fps^2;
α = energy coefficient; and
S_f = energy gradient.

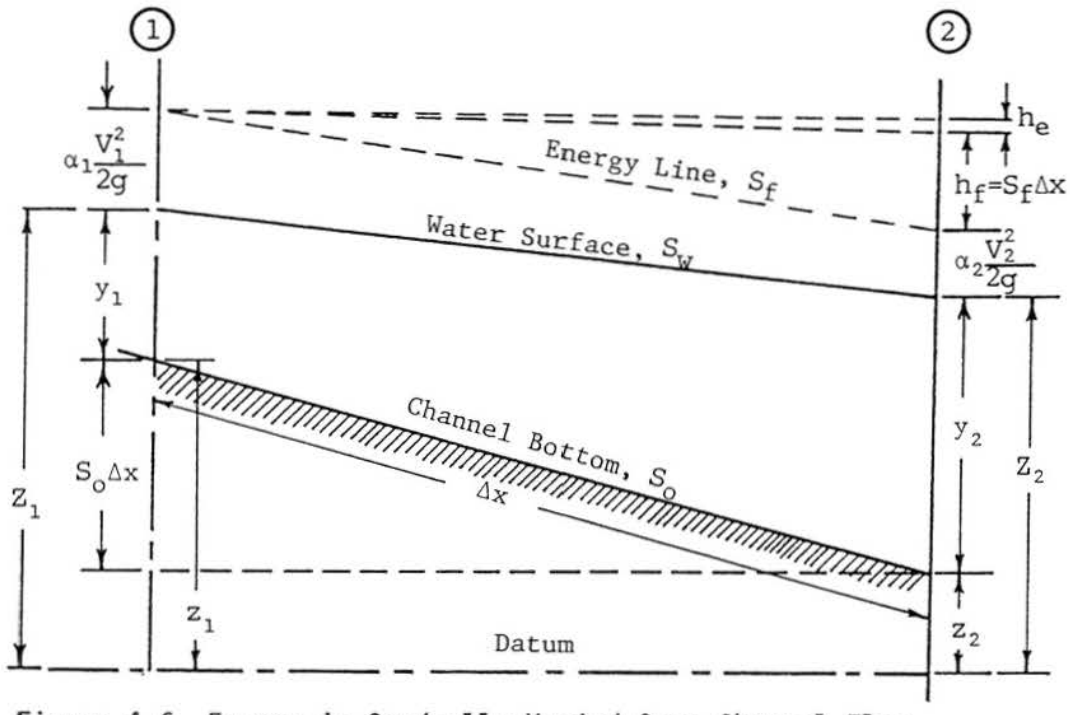

Figure 4.6 Energy in Gradually Varied Open Channel Flow

The water surface elevations at the two end sections are referenced to a horizontal datum as

$$Z_1 = S_o \Delta x + y_1 + z_2 \tag{4.9}$$

and

$$Z_2 = y_2 + z_2 \tag{4.10}$$

The friction loss is

$$h_f = S_f \Delta x = \frac{1}{2}(S_{f1} + S_{f2})\Delta x. \tag{4.11}$$

For ease of computation, the friction slope, S_f, is taken as the average of the slopes at the two end sections, or $\overline{S}_f$. Substituting Equations 4.9, 4.10, and 4.11 into Equation 4.8 yields

$$Z_1 + \alpha_1 \frac{V_1^2}{2g} = Z_2 + \alpha_2 \frac{V_2^2}{2g} + h_f + h_e, \tag{4.12}$$

where

α = energy coefficient; and
h_e = eddy losses.

The eddy loss depends mainly on the velocity head change and may be expressed as a part of it, or $k\left(\Delta\alpha \frac{V^2}{2g}\right)$ where k is a coefficient. For gradually converging and diverging reaches, k = 0 to 0.1 and 0 to 0.2, respectively. For abrupt expansions and contractions, k is about 0.5.

The total heads at the two end sections are

$$H_1 = Z_1 + \alpha_1 \frac{V_1^2}{2g} \tag{4.13}$$

$$H_2 = Z_2 + \alpha_2 \frac{V_2^2}{2g} \tag{4.14}$$

Substituting into Equation 4.12 yields

$$H_1 = H_2 + h_f + h_e \tag{4.15}$$

Equation 4.15 is the basic equation which is used to develop the procedure used in the standard step method. The standard step computation can be arranged in tabular form and solved as shown in Table 4.2.

The backwater computations must always be carried upstream if the flow is subcritical and downstream if it is supercritical. In computing a flow profile, the following information is generally required:

- The discharge for which the flow profile is desired.
- The water surface elevation at the control section. If this is not available, the comutation may start from an

TABLE 4.2

Standard Step Method of Computation

Station (1)	Z (2)	y (3)	A (4)	V (5)	$\alpha\frac{V^2}{2g}$ (6)	H (7)	R (8)	$R^{\frac{4}{3}}$ (9)	S_f (10)	$\overline{S}_f$ (11)	Δx (12)	h_f (13)	h_e (14)	H (15)

Before the computations begin, the flow rate must be specified as well as the channel roughness, n; slope, S_O; and energy coefficient, α.

Col. 1: Identify channel cross section by station number

Col. 2: Water surface elevation at the station. A trial value is first entered in this column; this will be verified or rejected on the basis of the computations made in the remaining columns of the table. For the first step, this elevation must be given or assumed. When the trial value in the second step has been verified, it becomes the basis for the verification of the trial value in the next step, and so on.

Col. 3: Depth of flow in feet, corresponding to the water surface elevation in column 2.

Col. 4: Water area corresponding to y in column 3.

Col. 5: Mean velocity equal to the given discharge, Q, divided by the water area in column 4.

Col. 6: Velocity head in feet, corresponding to the velocity in column 5.

Col. 7: Total head computed by Equation 4.13, equal to the sum of Z in column 2 and the velocity head in column 6.

Col. 8: Hydraulic radius in feet, corresponding to y in column 3.

Col. 9: Four-thirds power of the hydraulic radius.

Col. 10: Friction slope computed by $S_f = \frac{n^2 V^2}{2.22 R^{4/3}}$, with V from column 5 and $R^{4/3}$ from column 9.

Col. 11: Average friction slope through the reach between the sections in each step, approximately equal to the arithmetic mean of the friction slope just computed in column 10 and that of the previous step.

Col. 12: Length of the reach between the sections, equal to the difference in station numbers between the stations.

Col. 13: Friction loss in the reach, equal to the product of the values in columns 11 and 12.

Col. 14: Eddy loss in the reach, equal to zero.

Col. 15: Elevation of the total head in feet. This is computed by Equation 4.15, that is, by adding the values of h_f and h_e in columns 13 and 14 to the elevation at the lower end of the reach, which is found in column 15 of the previous reach. If the value so obtained does not agree closely with that entered in column 7, a new trial value of the water-surface elevation is assumed, and so on, until agreement is obtained. The value that leads to agreement is the correct water-surface elevation. The computation may then proceed to the next step.

assumed elevation at a section far enough away from the initial section through which the profile is desired.

- The geometric elements at various channel sections along the reach for all depths of flow within the range expected. Cross sections and reach length between are the two primary elements.

- The channel roughness and losses at each section.

Chow (1959) and Henderson (1966) provide an excellent discussion of the standard step method and procedures to compute backwater profiles.

One of the most difficult assessments that an engineer must make in the performance of a backwater analysis is the estimation of the surface roughness of the channel. Manning's n is a measure of surface roughness and is largely dependent on the material of which the channel boundaries are composed. There are several other factors which affect the value of n, including vegetation, channel irregularity, alignment, silting, scouring, obstructions, size and shape of channel, and depth of flow. Values of n are usually selected from tables for various materials or from pictures of channel for which values of n have been determined empirically. Chow (1959) and the United States Geological Survey (1967) are excellent references which should be used in estimating channel roughness. The following table can be used to estimate roughnesses for channels and closed conduits.

SURFACE	Min. n	Max. n
PVC Pipe	.010	.012
Concrete Pipe	.012	.015
Cast Iron Pipe	.013	.017
Grass Lined Channels	.020	.040
Rock Cut Channels, Smooth	.025	.040
Rock Cut Channels, Irreg.	.030	.045
Natural Streams	.025	.150

Vegetated open channel spillways usually consist of an inlet channel, a control section, and an exit channel. Subcritical flow occurs in the inlet channel and the flow is usually supercritical in the exit channel. Vegetated open channel spillways are typically trapezoidal in cross-section and are protected from erosion by a grass cover. While erosion damage is normally considered to be a maintenance related deficiency, it becomes a safety problem in cases where failure of the discharge channel will cause the flow to impinge on the toe or slopes of the embankment. As a general guideline, channels can be expected to suffer erosion damage when velocities exceed 8 fps.

The amount of erosion that will occur in a channel depends upon the characteristics of the soil, the type and density of the vegetation cover, the discharge velocity, and the duration and frequency of use. To minimize erosion, vegetated open channel spillways should be designed with horizontal or adverse sloped inlet channels and control sections that are located away from the dam. The anticipated average use of a vegetated open channel spillway should be kept to a minimum; it is preferable that the spillway be designed to carry flows only in excess of the 100-year event. In highly erodible soils, concrete sills or weirs should be constructed to stop headward erosion and prevent failure of the spillway.

All spillway flows should be confined to the channel with training berms or levees. Training berms must be high enough to contain the peak flow during the spillway design flood.

2. Critical Flow Computations

When an ogee spillway or a weir is located adjacent to the reservoir, the spillway rating curve can be determined by analyzing critical flow in an open channel. Critical flow is defined as the state of flow at which the specific energy, $y + \frac{V^2}{2g}$, is a minimum for a given discharge, Q. Using Equation 4.16, discharge rates can be computed at various values of critical depth.

$$Q = \sqrt{\frac{A^3 g}{T}}, \qquad (4.16)$$

where

Q = flow rate in cfs;
A = area of flow at critical depth in ft^2;
g = acceleration of gravity, 32.2 ft/sec^2; and
T = top width of water surface.

In order to develop a spillway rating curve, the reservoir elevation, $ELEV_{res}$, must be computed at each value of critical depth, y_c. This can be accomplished using Equation 4.17:

$$ELEV_{res} = ELEV_{sp} + y_c + \frac{V_c^2}{2g}, \qquad (4.17)$$

where

$ELEV_{res}$ = Elevation of the reservoir;
$ELEV_{sp}$ = Spillway crest elevation;
y_c = critical depth in feet; and
$\frac{V_c^2}{2g}$ = velocity head.

The only unknown parameter in Equation 4.17 is the velocity head, $\frac{V_c^2}{2g}$. It can be determined by using the continuity equation to compute the velocity at each value of critical depth, $V_c = \frac{Q}{A}$

Equation 4.16 should only be used to rate control structures such as weirs that will not become submerged by downstream conditions. It is always advisable to perform a backwater analyses of the discharge channel when there are questions about the channel's capacity and erosion resistance, or if training berms must be evaluated.

C. Reservoir Routing

Reservoirs can be routed by any number of level pool techniques. The basic requirements include reservoir elevation-storage information and a spillway rating curve. The beginning reservoir elevation should be the water storage elevation (normal pool) as defined by 10 CSR 22-1.020(62).

After the inflow hydrograph has been computed, the storm hydrograph must be routed through the reservoir. The staff of the Dam and Reservoir Safety Program uses the modified Puls routing method described by Chow (1964). This method assumes an invariable discharge-storage relationship and neglects the variable slope occurring during the passage of a flood wave. It is a satisfactory method for reservoir routing but should not be used for channel routing when unsteady flow conditions exist.

Modified Puls routing requires the solution of the continuity equation which can be expressed as

$$I - O = \frac{\Delta S}{\Delta t}, \qquad (4.18)$$

where

I = inflow into the reservoir;
O = outflow from the reservoir; and
S = water stored in the reservoir.

Equation 4.18 is exact but its application to practical problems involves approximations. The basic assumptions are that the water surface in the reservoir is level at all times and that the average of the inflow and outflow at the beginning and ending of a routing period are equal to the average flow during the period. Using subscripts 1 and 2 to denote the beginning and ending of a routing period gives

$$\frac{I_1 + I_2}{2} - \frac{O_1 + O_2}{2} = \frac{S_2 - S_1}{\Delta t} \qquad (4.19)$$

Arranging Equation 4.19 so that all known values are on the left yields

$$\frac{I_1 + I_2}{2}\Delta t + S_1 - \frac{O_1 \Delta t}{2} = S_2 + \frac{O_2 \Delta t}{2} \qquad (4.20)$$

The assumption that $(I_1 + I_2) / 2$ equals the average inflow during a routing period implies that the inflow hydrograph varies linearly over the time step, Δt. Thus the controlling factor in selecting the routing period Δt is that it be sufficiently short so that this assumption is not seriously violated. The routing period should never be greater than the time of travel through the reservoir and should be chosen to ensure that the peak of the inflow hydrograph will be considered. As a rule of thumb, the routing period should be long enough to consider at least four inflows on the rising limb of the inflow hydrograph.

The two relationships that must be developed to solve Equation 4.20 involve the outflow from the reservoir and storage within the reservoir. This section will consider only storage in the reservoir. The previous sections in this chapter addressed the issue of outflow, which is determined by rating both closed conduit and open channel spillways.

Like basin area, reservoir areas can be determined from a topographic map using a planimeter. The reservoir's water surface area should be determined at each successive contour from the toe to the top of the dam. For dams that have been in existence several years, contour lines may not extend below the normal pool elevation. In this case, only reservoir volumes above normal pool can be computed. Hydrographic surveys are useful to determine the amount of silt in the reservoir but they are not required to perform reservoir routing.

The volume between successive contours can be determined by either of two methods: the average end area method or the conic method. The average end area method averages the area between two successive contours and multiplies the result times the change in elevation as shown in Equation 4.21

$$\Delta Vol = \left(\frac{A_n + A_{n+1}}{2}\right)(E_{n+1} - E_n), \qquad (4.21)$$

where

ΔVol = volume of storage between elevations E_n and E_{n+1};
A_n = water surface area at elevation E_n;
A_{n+1} = water surface area at elevation E_{n+1}; and
E = elevation.

The conic method can be used to compute reservoir volume from surface area versus elevation data as follows:

$$\Delta Vol = (E_{n+1} - E_n)(A_n + A_{n+1} + \sqrt{A_n A_{n+1}})$$

After the reservoir volumes have been computed, a graph of elevation versus storage is developed. Using this graph and the spillway rating curve, a graph of discharge versus storage is created as shown in Figure 4.7. Each point on the curve represents reservoir storage and outflow at a given elevation. Figure 4.8 is a plot of outflow, O, versus $\left(S + \frac{1}{2}O\Delta t\right)$ This graph is obtained by adding to the abscissa of the storage curve, Figure 4.7, one half of the value of $(O\Delta t)$ At the beginning of a routing period, the known values are the inflows for periods 1 and 2 and the outflow at period 1. The goal is to determine the outflow for period 2.

The modified Puls routing procedure involves the following steps:

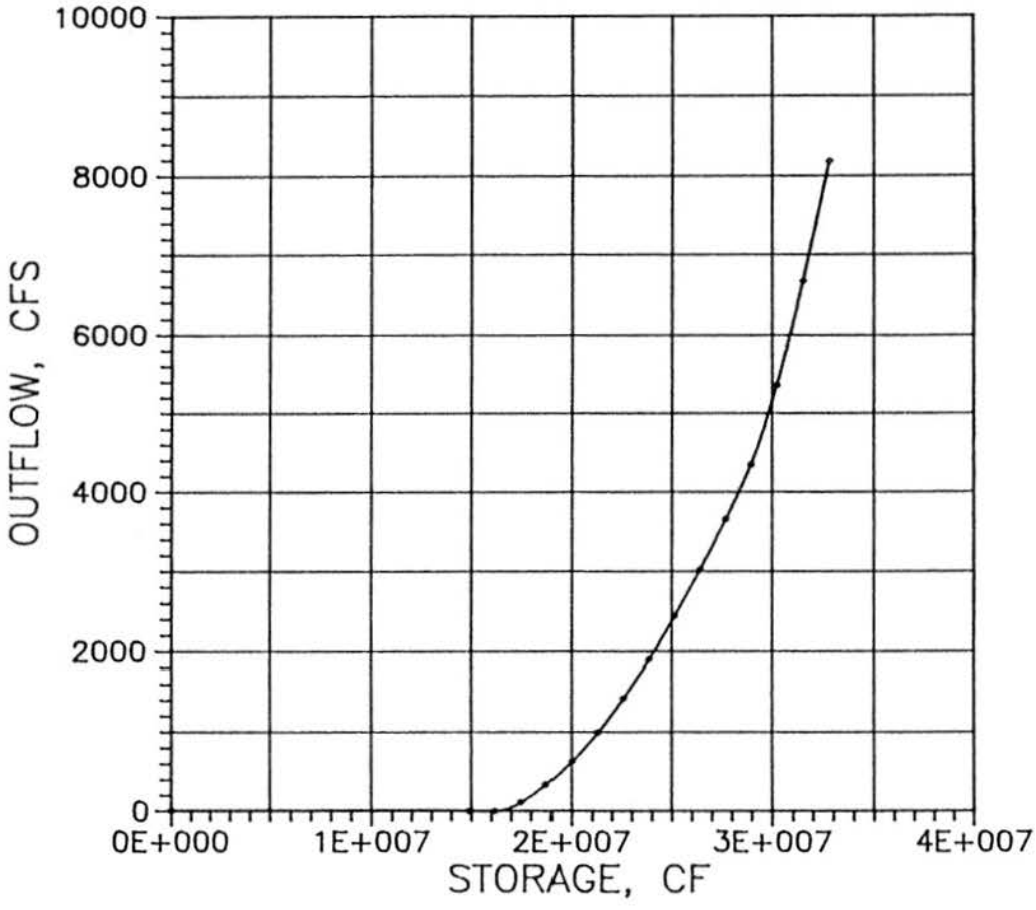

Figure 4.7 Storage Versus Outflow Curve for a Reservoir

Step 1 Compute $(I_1 + I_2)/2$, the average inflow.

Step 2 For an initial outflow, O_1, the storage S_1 is obtained from the storage versus outflow curve, Figure 4.7.

Step 3 Compute the quantity $\left(S_1 - \frac{1}{2}O_1\Delta t\right)$.

Step 4 Using Equation 4.18, determine the quantity $\left(S_2 + \frac{1}{2}O_2\Delta t\right)$ by adding the average inflow plus the quantity $\left(S_1 + \frac{1}{2}O_1\Delta t\right)$.

Step 5 Determine the outflow O_2 corresponding to $\left(S_2 + \frac{1}{2}O_2\Delta t\right)$ from Figure 4.8.

Several iterations of these computations are performed to construct the outflow hydrograph which is a plot of time versus outflow, O_2. The maximum water surface elevation during the design flood is then determined from the peak rate of outflow.

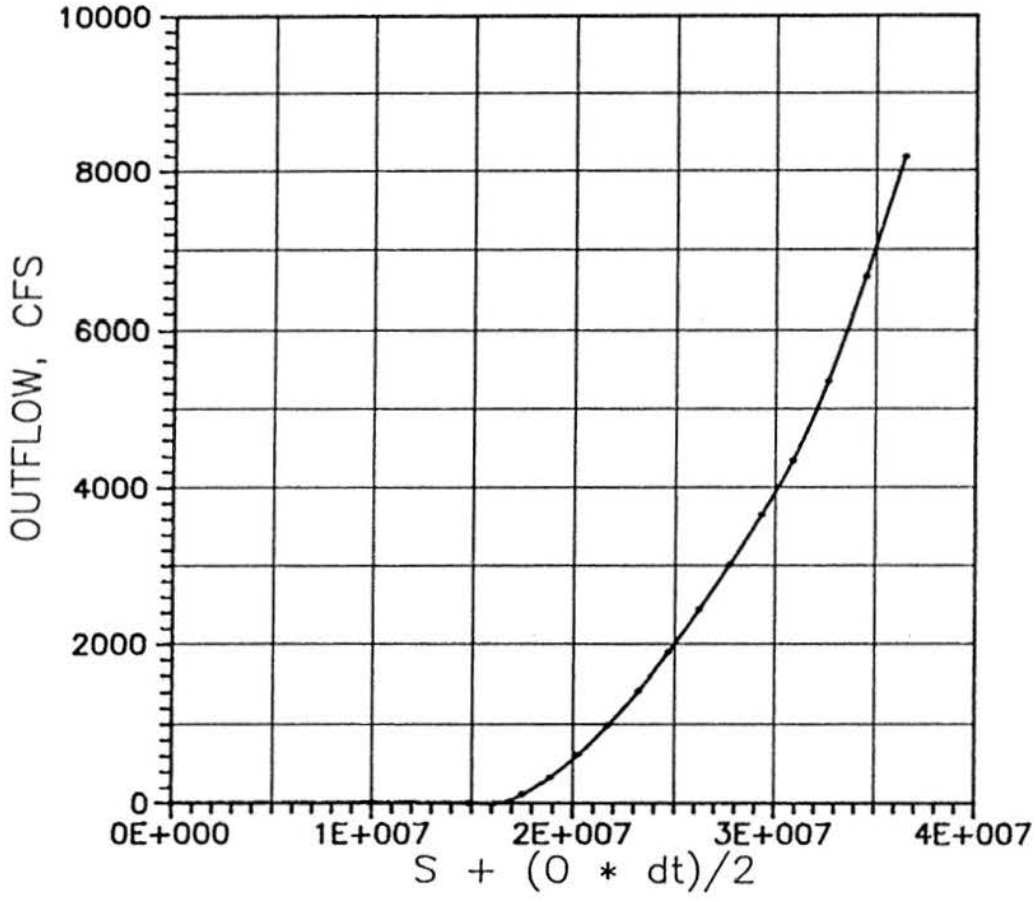

Figure 4.8 S + (O · dt)/2 Versus Outflow Curve for A Reservoir

CHAPTER V

GEOTECHNICAL CONSIDERATIONS

The geotechnical considerations in this chapter will focus on earth, rockfill and tailings dams. Figure 5.1 illustrates the differences between the three types of dams.

Rolled earthfill dams are constructed in successive mechanically compacted layers. They can be constructed as homogeneous embankments or as zoned dams with an impervious core. Homogeneous dams are constructed entirely or almost entirely of a single embankment material. They are so named to distinguish them from zoned dams, which contain different materials in different parts of the embankment. The downstream slope of a homogeneous dam on an impervious foundation will theoretically develop seepage to a height of roughly one-third the depth of the reservoir pool. Sometimes, homogeneous and zoned embankments are constructed with internal drains to control seepage. Chimney, blanket and trench drains are three of the more common types of internal drains used in Missouri. Internal drains serve two important purposes. They control seepage and reduce the pore pressure in the downstream portion of the dam thereby improving the stability of the dam.

Rockfill dams usually have an impervious core which is flanked by zones of material considerably more pervious. The pervious zones enclose, support, and protect the impervious core; the upstream pervious zone affords stability against rapid drawdown; and the downstream pervious zone acts as a drain to control the line of seepage. To prevent internal erosion of the impervious core, a filter is placed between the core and the downstream rock shell.

Tailings or industrial water retention dams are used by mining companies to store waste rock from mining. All tailings dams greater than 35 feet in height are regulated under the dam safety law. The three types of tailings dams currently in existence in Missouri are lead, barite, and iron tailings. Each of these dams typically includes a clay starter dam which is normally constructed as a homogeneous earthfill embankment.

Lead tailings used in dam construction are typically ground limestone and dolomite. The silty sand tailings have a gradation ranging from a #40 to a #200 sieve. On-dam cycloning (Vick, 1983) is the primary method used to disposit lead tailings in Missouri. Underflow sand from each hydro-cyclone is discharged toward the embankment face, and overflow slimes are discharged into the impoundment. A wide zone of slimes adjacent to the upstream slope of the dam helps restrict the flow of seepage through the dam.

Barite tailings used in dam construction consist of well graded gravel. Barite slimes have low permeability and consist of red and dark brown clay.

Iron tailings dams are built with crushed rock that ranges in size from 1/4 to 5/8 inch. In order for iron tailings dams to retain water, a clay blanket or an impermeable liner must be placed on the upstream slope.

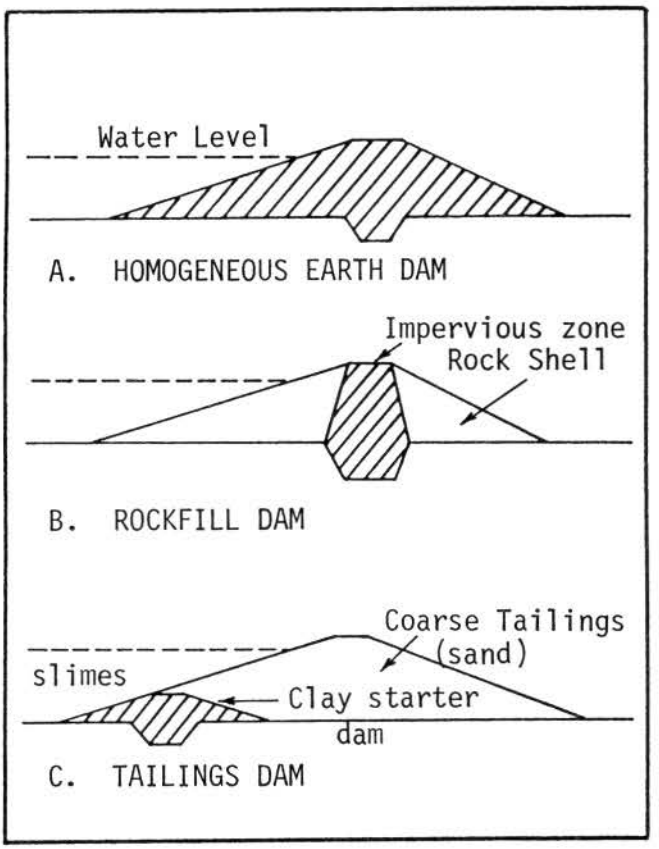

Figure 5.1 Types of Dams in Missouri

Tailings dams can be constructed by the upstream, centerline and downstream methods as shown in Figure 5.2.

The geotechnical analysis of industrial water retention dams involve seepage, slope stability and seismic response computations. The design for all new dams built in Missouri after August 13, 1981 must include a geotechnical analysis to show that the dam will meet the criteria in 10 CSR 22-3.020. A geotechnical analysis is not required for dams that were in existence prior to August 13, 1981 unless the height, slope or reservoir elevation is being modified.

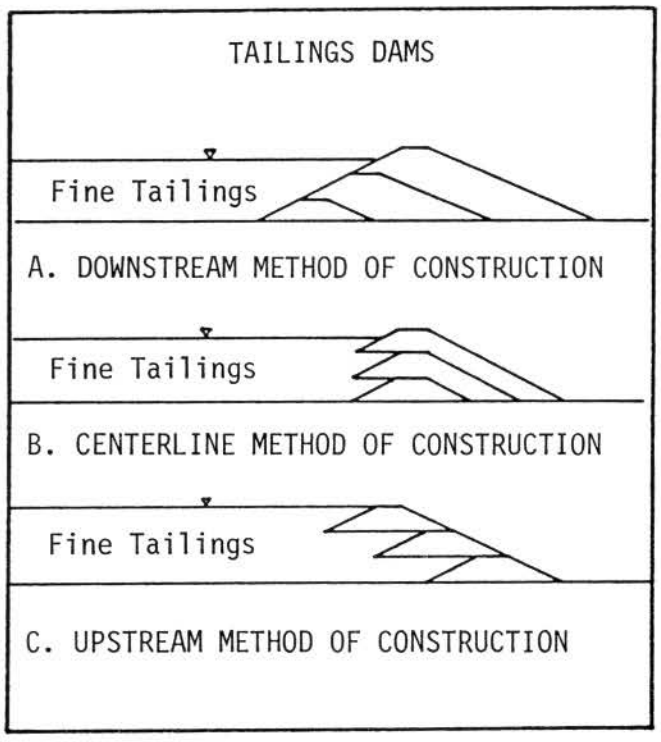

Figure 5.2 Methods of Constructing Tailings Dams

A. Soil Classification

Knowledge of soil classification, including typical engineering properties of soil groups, is essential when investigating earth materials or foundations for structures. Soil classification can be used to estimate engineering characteristics of soils for use in the analysis of small dams.

The Unified Soil Classification System is recommended for use in the classification of soils. Figure 5.3, the Unified Soil Classification Chart, is the basis for soil classification under this system.

In addition to proper classification, it is important to include an adequate description of the soil in reports or logs of explorations. The classification chart contains the information required for describing soils, citing several examples.

B. Foundation Cutoffs

Many dam sites have a foundation consisting of alluvial deposits of permeable sand and gravel, silt, or weathered rock at or near the surface with an impervious (less permeable) stratum of rock, clay, or shale at a greater depth. For these sites, a positive cutoff is recommended to assure a successful and stable dam. The cutoff should intersect the impervious stratum and be an extension of the core of the embankment. A positive cutoff is particularly important where the water in storage is used for irrigation or water supply.

Where a positive cutoff is impractical because of the depth to an impervious stratum, a partial cutoff may provide foundation stability and reduce seepage losses to acceptable levels. Regardless of the foundation conditions, the only way to determine the economical feasibility of a positive cutoff or partial cutoff is to make a seepage analysis and water balance.

C. Foundation and Embankment Drainage

The impervious portion of an earthfill dam provides resistance to seepage, which creates the reservoir. Soils vary in permeability, and even the tightest clays can transmit seepage. Therefore, seepage control is a major concern in dam design. Filter and drainage systems must have adequate capacity but still control the movement of fine grained soil particles through the embankment. Internal erosion of fine grained soil can lead to a condition known as "piping" in which a conduit or pipe forms within the embankment. If allowed to continue, the erosion can eventually migrate upstream to the reservoir and cause a total failure of the dam.

The movement of reservoir water through the dam depends on the reservoir level, the degree of permeability of the embankment material in the horizontal and vertical directions, the amount of remaining pore-water pressures caused by compressive forces during construction, and the distance over which the seepage travels. The upper surface of seepage is called the phreatic surface; in a cross section, it is referred to as a phreatic line. Although the soil may be saturated by capillarity above this line, giving rise to a "line of saturation," seepage is limited to the portion below the phreatic line.

Drains are included in embankments and foundations for two basic reasons: to prevent piping by controlling migration of soil particles under seepage flow; and to control pressure build-up by allowing free drainage of seepage flow. There are no hard and fast rules for selecting a margin of safety for the capacity of internal drains. Cedergren (1977), recommends that drains be designed to carry at least ten times as much seepage as expected due to difficulty in estimating permeability of the drain material and seepage rates. Judgement is required and should be related to past experience with similar materials and an evaluation of the data obtained during the site investigation and testing program.

In recent years, many engineers have opted to use geotextiles as filters for granular drains. Geotextiles can be either woven or nonwoven. They are used in subsurface drainage systems as a permeable separator to keep soil

Major Divisions			Group Symbols	Typical Names	Laboratory Classification Criteria		
Coarse-grained soils (More than half of material is larger than No. 200 sieve size)	Gravels (More than half of coarse fraction is larger than No. 4 sieve size)	Clean gravels (Little or no fines)	GW	Well-graded gravels, gravel-sand mixtures, little or no fines	Determine percentages of sand and gravel from grain-size curve. Depending on percentage of fines (fraction smaller than No. 200 sieve size), coarse-grained soils are classified as follows: Less than 5 per cent GW, GP, SW, SP; More than 12 per cent GM, GC, SM, SC; 5 to 12 per cent *Borderline* cases requiring dual symbols[b]	$C_u = \frac{D_{60}}{D_{10}}$ greater than 4; $C_c = \frac{(D_{30})^2}{D_{10} \times D_{60}}$ between 1 and 3	
			GP	Poorly graded gravels, gravel-sand mixtures, little or no fines		Not meeting all gradation requirements for GW	
		Gravels with fines (Appreciable amount of fines)	GM[a] d u	Silty gravels, gravel-sand-silt mixtures		Atterberg limits below "A" line or P.I. less than 4	Above "A" line with P.I. between 4 and 7 are *borderline* cases requiring use of dual symbols
			GC	Clayey gravels, gravel-sand-clay mixtures		Atterberg limits below "A" line with P.I. greater than 7	
	Sands (More than half of coarse fraction is smaller than No. 4 sieve size)	Clean sands (Little or no fines)	SW	Well-graded sands, gravelly sands, little or no fines		$C_u = \frac{D_{60}}{D_{10}}$ greater than 6; $C_c = \frac{(D_{30})^2}{D_{10} \times D_{60}}$ between 1 and 3	
			SP	Poorly graded sands, gravelly sands, little or no fines		Not meeting all gradation requirements for SW	
		Sands with fines (Appreciable amount of fines)	SM[a] d u	Silty sands, sand-silt mixtures		Atterberg limits above "A" line or P.I. less than 4	Limits plotting in hatched zone with P.I. between 4 and 7 are *borderline* cases requiring use of dual symbols
			SC	Clayey sands, sand-clay mixtures		Atterberg limits above "A" line with P.I. greater than 7	
Fine-grained soils (More than half material is smaller than No. 200 sieve)	Silts and clays (Liquid limit less than 50)		ML	Inorganic silts and very fine sands, rock flour, silty or clayey fine sands, or clayey silts with slight plasticity			
			CL	Inorganic clays of low to medium plasticity, gravelly clays, sandy clays, silty clays, lean clays			
			OL	Organic silts and organic silty clays of low plasticity			
	Silts and clays (Liquid limit greater than 50)		MH	Inorganic silts, micaceous or diatomaceous fine sandy or silty soils, elastic silts			
			CH	Inorganic clays of high plasticity, fat clays			
			OH	Organic clays of medium to high plasticity, organic silts			
	Highly organic soils		Pt	Peat and other highly organic soils			

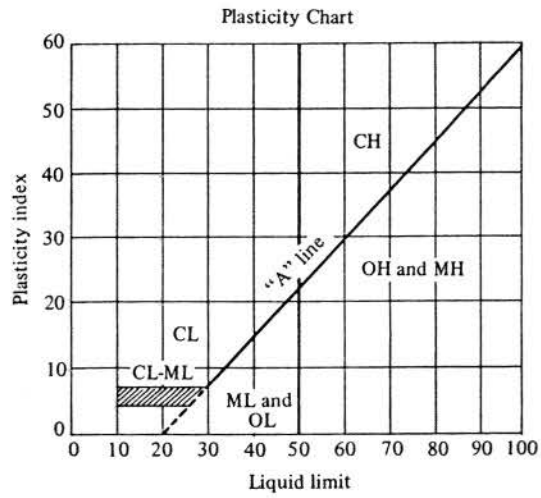

[a]Division of GM and SM groups into subdivisions of d and u are for roads and airfields only. Subdivision is based on Atterberg limits; suffix d used when L.L. is 28 or less and the P.I. is 6 or less; the suffix u used when L.L. is greater than 28.
[b]Borderline classifications, used for soils possessing characteristics of two groups, are designated by combinations of group symbols. For example: GW-GC, well-graded gravel-sand mixture with clay binder.

Figure 5.3 Unified Soil Classification Chart (ASTM D-2487)

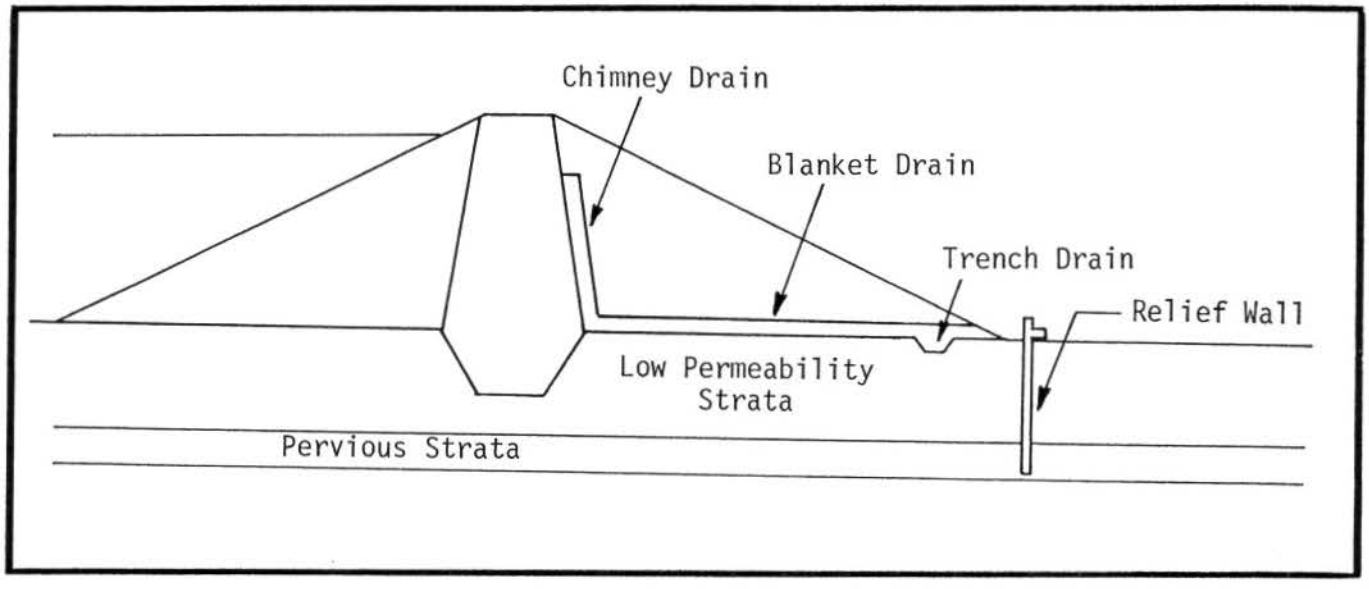

Figure 5.4 Types of Drains

out of the drainage media and permit water to pass freely. Permittivity (capacity to pass water) and pore size (opening size) are critical characteristics of geotextiles. Nonwoven geotextiles are frequently used in dam construction because of their high flow capacity and small pore size. Care should always be taken to assure an effective installation.

Four types of drains will be discussed: chimney drains, blanket drains, trench drains and relief wells. These are shown in Figure 5.4. It should be noted that the selection of the drainage media is a very important consideration. Crushed limestone should not be used. Instead, river run gravel or sand (quartz and chert material) should be selected to ensure the long term success of the drain.

1. Chimney Drains

Chimney drains are primarily interceptors that provide positive control of embankment seepage. With a chimney drain, water that percolates through the soil is intercepted to prevent seepage in the materials downstream from the drain. Chimney drains are applicable where the downstream embankment material cannot be allowed to become saturated and where the horizontal permeability of the fill is significantly higher than the vertical permeability. It may be more economical to place poor materials in a "random fill" zone downstream from a chimney drain than to waste them. Chimney drains are also applicable where embankment materials are susceptible to cracking.

2. Blanket Drains

Horizontal blanket drains occasionally are used in new dams in Missouri. They are primarily used to intercept foundation seepage and prevent saturation of the dam. Horizontal blanket drains are applicable where there is no significant difference between the vertical and horizontal permeability of the embankment or the foundation; where bedrock is pervious (if the drain is placed directly on bedrock); or where a good bond cannot be obtained between bedrock and the embankment and underseepage is a problem.

3. Trench Drains

Trench drains are used more frequently then the other drain types in both new dams and modifications to existing dams. They can be used to provide drainage to the foundation, embankment or abutments. Trench drains are typically excavated with a back hoe and lined with geotextile filter fabric. River run gravel works well as a drainage medium.

Prefabricated drainage composites can also be used as a trench drain, especially in modifications to existing dams. They provide consistent in-place drainage and can reduce the material cost, installation time, and design complexity in some applications. Prefabricated drainage composites typically are two-component materials consisting of a three-dimensional drain core or net with a fabric attached. Water passes through the fabric and into the core. The core acts as a collector and transporter of seepage while the fabric acts as a filtering medium.

4. Relief Wells

Relief wells are generally located near the downstream toe of an embankment. They are particularly adapted for control of pressures from confined and alluvial aquifers

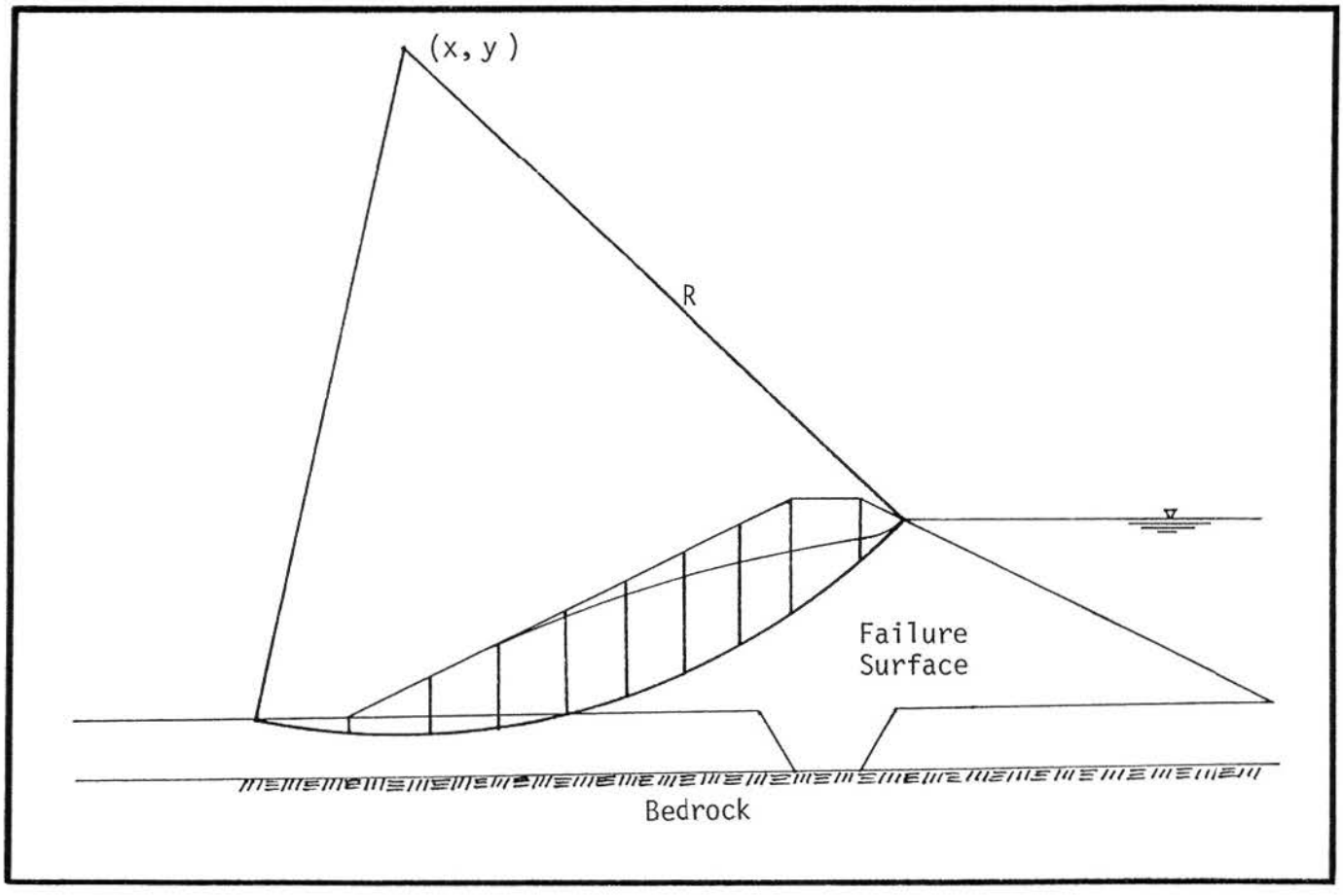

Figure 5.5 Circular Failure Surface in an Earthfill Dam

that are too deep to be drained with foundation drains. They are often used in conjunction with other types of drains.

Drain outlets are needed to conduct the accumulated seepage from all internal drains to a controlled discharge point. PVC pipe works well and provides the dam owner with a outlet location at which to measure the seepage rate.

Two excellent discussions on the subject of internal drains and filters were written by Sherard, Dunnigan, and Talbot (1984).

D. Structural Stability

The potential for failure from sliding, sloughing and rotation must be analyzed, documented and incorporated in the design of all new dams. Embankment and foundation design and geotechnical exploration should be consistent with the complexity of the site and the potential for failure. Anticipated settlement, seepage, and cracking should be considered and documented.

The slope stability criteria used in this manual is that contained in 10 CSR 22-3.020, Tables 1, 3, and 4. Various procedures are available for calculating the factors of safety of embankment sections. The basic methods include the circular arc and the sliding wedge methods.

The staff of the Dam and Reservoir Safety Program use the ICES LEASE and STABL computer programs to perform slope stability analyses. Both programs employ the simplified Bishop Method which divides potential failure surfaces into slices for analysis. Figure 5.5 depicts a circular failure surface in an embankment dam. The factor of safety is the ratio of the moment of shear strength (resisting forces) along the failure surface to the moment of the weight of the failure mass (driving forces). To determine the minimum factor of safety for a dam requires the analysis of several failure surfaces.

The simplified Bishop Method uses a basic moment equilibrium equation for the summation of forces on each

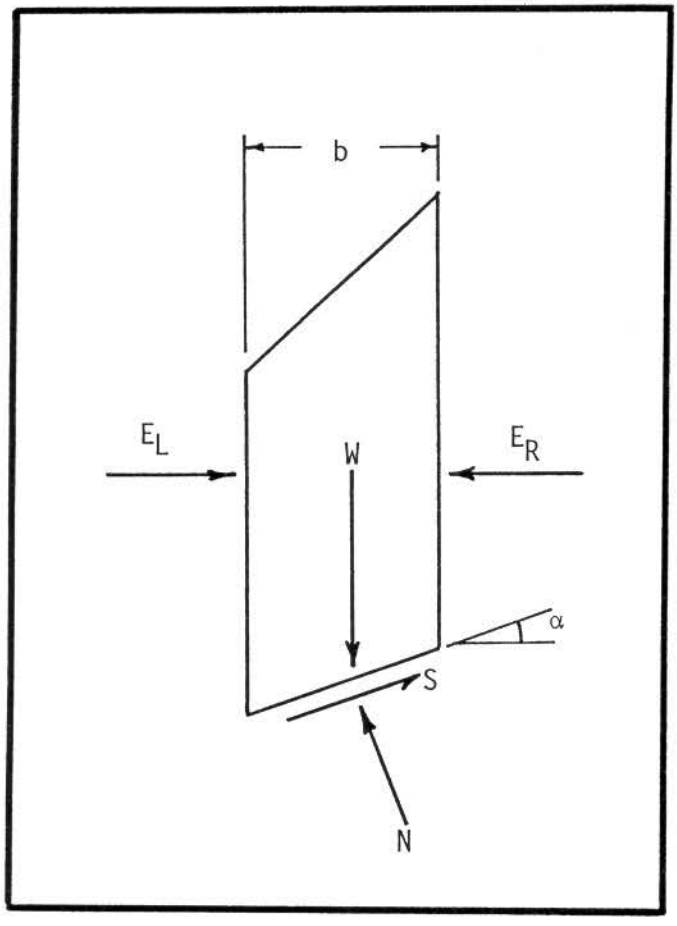

Figure 5.6 Free Body Diagram - Simplified Bishop Method

slice as shown in Figure 5.6. Symbols and definitions are given below.

W = total weight of slice, soil plus water;
b = width of slice;
E_L = Force acting on left boundary of slice;
E_R = Force acting on right boundary of slice;
S = resultant of friction and cohesion forces;
N = effective normal force;
α = angle between the base of each slice and horizontal.

The method sums the vertical components of the forces. The side forces are assumed to be equal, horizontal, and colinear. The factor of safety is computed by Equation 5.1:

$$F = \frac{\sum\left[c + \left(\frac{W}{b} - u\right)\tan\phi\right]b\left(\frac{1}{M_\alpha}\right)}{\sum(W\sin\alpha)}, \qquad (5.1)$$

where

c = cohesion of soil at the bottom of the slice;
W = total weight of slice, soil plus water;
b = width of slice;
u = hydrostatic pressure on the bottom of the slice;
ϕ = angle of frictional resistance of soil;
$M_\alpha = f(F) = \left[1 + \frac{\tan\alpha\tan\phi}{F}\right]\cos\alpha$; and
α = angle between the base of each slice and horizontal.

Except for M_α, all of the parameters in Equation 5.1 are based on the physical characteristics of the failure surface and the soil. Once these parameters are determined, Equation 5.1 can be solved iteratively. This is necessary because the factor of safety term, F, is on both sides of the equation.

A trial factor of safety value can be computed from Equation 5.2:

$$F_1 = \frac{\sum(cb + W\tan\phi)}{\sum(W\sin\alpha)} \qquad (5.2)$$

The parameter, F_1, is used to calculate M_α and solve Equation 5.1. The result of Equation 5.1 is used in the next iteration and the process is repeated until convergence occurs. Lambe and Whitman (1969), Perloff and Baron (1976), and Huang (1983) have provided a good description of the simplified Bishop procedure in detail.

Analyses are to be made for the loading conditions that are most critical during the design life of the structure. For new dams, the following conditions must be considered: (1) end of construction; (2) steady seepage - full reservoir; (3) steady seepage - maximum reservoir; (4) sudden drawdown; and (5) earthquake. When modifications are made to the slopes, height or water storage elevation of dams built before August 13, 1981, only the steady seepage and sudden drawdown cases must be analyzed.

Selection of the soil strength parameters is the most important facet of the slope stability analysis. Unlike steel and concrete, soil strengths vary widely, depending on the type and location of the soil. When testing a soil, the soil strength depends upon consolidation (effective confining) pressure, drainage during shear, volumetric history, disturbance, and strain rate. In most cases, the strength of a soil can be expressed by Equations 5.3 and 5.4:

$$\bar{\tau} = \bar{c} + (\sigma - u)\tan\bar{\phi}, \qquad (5.3)$$

where

$\bar{\tau}$ = effective shear stress on the surface at failure;
$\bar{c}$ = cohesion intercept based on effective stresses;
σ = total normal stress acting on the failure surface;
u = pore water pressure;
$\bar{\phi}$ = friction angle based on effective stresses;

and

$$\tau = c + \sigma \tan\phi, \qquad (5.4)$$

where

τ= shear stress on the surface at failure;

c= cohesion intercept;

σ= total normal stress acting on the failure surface; and

ϕ= friction angle.

As depicted in Equations 5.3 and 5.4, two basically different approaches to the stability problem can be used by the engineer: the effective stress method and the total stress method. Drained strength parameters are used in an effective stress analysis while undrained strength parameters are used in a total stress analysis. According to Sherard et. al. (1963), there are two advantages of the effective stress method: the analysis is carried out with a somewhat more fundamental definition of the shear strength; and pore pressures assumed in the design can later be compared with those which develop in the dam and foundation as measured by piezometers.

In preparation for performing the stability analysis, the engineer should develop a cross section of the dam at the maximum section. The cross section should show all soil zones and their respective properties. Internal drains should be clearly delineated. The phreatic surface must be estimated using analytical methods or piezometric data. The estimated phreatic surface should be depicted on the cross section.

1. End of Construction Case

In the end of construction case, both the upstream and downstream slopes of a dam must be examined for stability. The most conservative condition assumes that the compacted soil does not consolidate under the weight of the soil layers above it and is sheared before drainage can occur. In reality, some dissipation of pore pressures occurs, with an increase in strength of the soil. Estimation of such dissipation of pressure with gain in strength is inexact. A pore pressure instrumentation system may be installed to verify the dissipation of pressures; however this is generally not economically feasible for small to medium sized dams. Soil strength values for the instantaneous end of construction condition can be obtained from the unconsolidated-undrained (UU) triaxial test.

In analyzing the end of construction factor of safety for the downstream slope, the staff of the Dam and Reservoir Safety Program examines all failure surfaces that would result in the release of water from the reservoir. The upstream slope is analyzed by examining all failure surfaces that intercept the crest.

2. Steady Seepage Cases

The two steady seepage conditions that must be analyzed are characterized by the completion of two processes. First, the soil in the dam has been consolidated by the overlying soil and second, all pore pressures have dissipated to values determined by the position of the phreatic surface. These cases are normally critical for the downstream slope because the seepage forces act in the downstream direction and the reservoir supports the upstream slope.

To determine the shear strength parameters, a representative soil sample is compacted to the design density, consolidated under a representative overburden stress, and fully saturated. It is then sheared under fully drained conditions. An alternative is to use the results of a consolidated-undrained (CU) triaxial test with pore pressure measurements. With either method, drained strength parameters are determined. Pore pressures within the dam are estimated from a flow net or as a function of the depth below the phreatic surface. The phreatic surface for a homogeneous dam on an impervious foundation can be estimated as shown in Figure 5.7.

Following Casagrande's (1937) procedure, it is assumed that the theoretical line of seepage starts from the pool level at a distance of 0.3Δ from the dam, where Δ is the horizontal distance from the upstream toe to the point where the reservoir elevation meets the upstream slope of the dam. Utilizing an x,y coordinate system with the origin at the downstream toe, the exit point of the phreatic surface can be computed from the known values of h and d in Figure 5.7. As an approximation, the y coordinate of the exit point can be taken as 0.33h and the phreatic surface can be drawn as a smooth curve between the entrance and exit points. The phreatic surface is thus assumed to be a parabola tangent to the downstream slope.

Huang (1983) developed tables to compute the exit and mid points as a function of d and h for downstream slopes ranging from s = 1.5 to 5.0. Huang's method can be used in embankment sections on an impervious base and without internal drains. Other methods of approximating the shape of the phreatic surface must be used when internal drains are located in the dam. In most cases, the staff of the Dam and Reservoir Safety Program estimates the shape of the phreatic surface in Figure 5.7 as 2-3 chords which connect the entrance and exit points.

Piezometric data from an existing embankment can also be used to develop the phreatic surface for use in the stability analysis.

In analyzing the steady seepage cases, the staff of the Dam and Reservoir Safety Program examines all failure surfaces that would result in the release of water from the reservoir. The cross section of the dam at the maximum section is analyzed. For the steady seepage-maximum reservoir case, the phreatic surface is assumed to be in the same location as the steady seepage-full reservoir condition unless the dam has an upstream pervious zone.

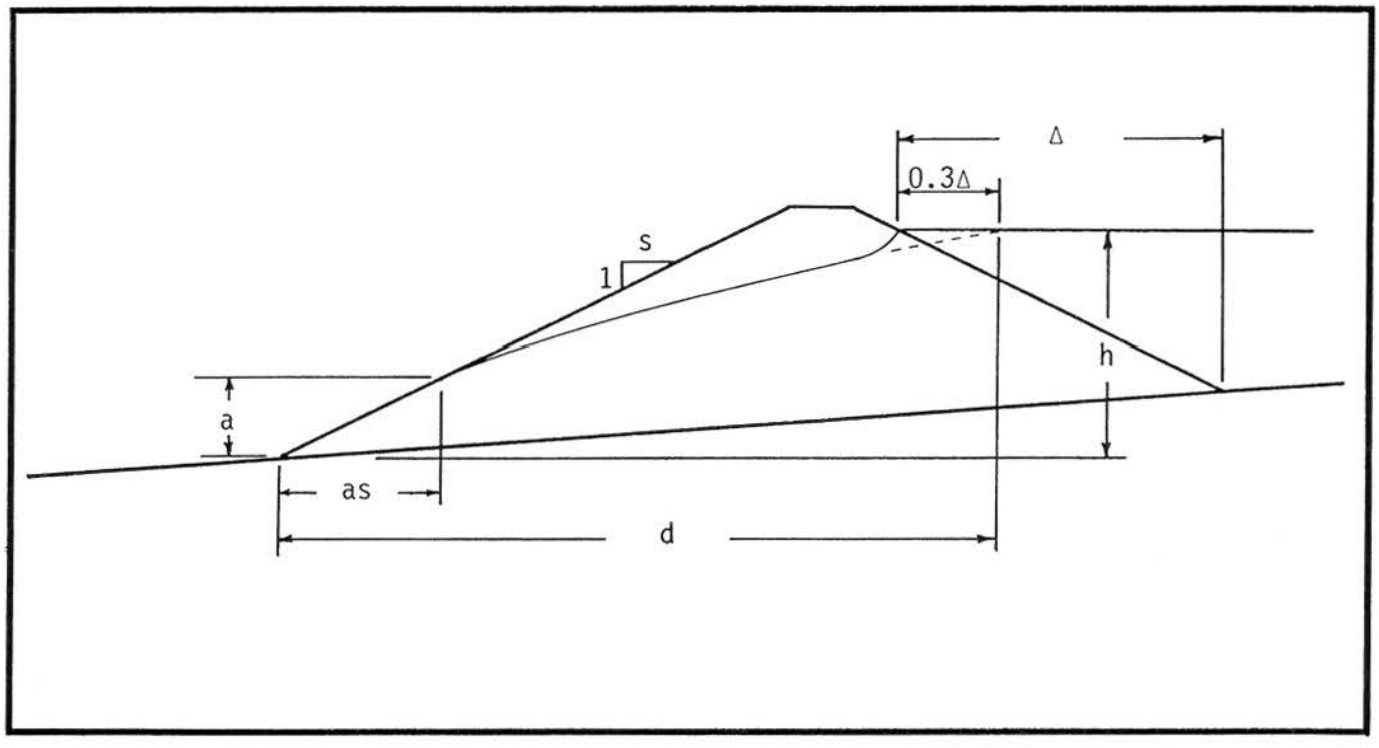

Figure 5.7 Phreatic Surface in an Earthfill Dam

3. Sudden Drawdown

The sudden, or rapid drawdown condition can be critical for the upstream slope of any dam where the reservoir elevation can be drawn down by a lake drain pipe or by other means. If the reservoir level cannot be drawn down quickly, this condition does not have to be analyzed.

In the sudden drawdown case, the soil is fully consolidated under the weight of the overlying material, and saturation with a static water level or a steady seepage condition is established. As the drawdown occurs, buoyancy forces are eliminated in the soil zone above the lowered reservoir elevation. The soil is sheared under undrained conditions by the increased weight of the saturated soil above the lowered reservoir elevation. The shear strength, however, is still governed by the consolidation that occurred before drawdown. The effective normal stress before drawdown should be used to calculate frictional resistance at the assumed failure surface.

The information and shear strength parameters required for the sudden drawdown analysis are obtained from the consolidated, undrained (CU) triaxial tests. The cross section of the dam at the maximum section should be used and the phreatic surface assumed to be in the same location as the steady seepage-full reservoir condition. The staff of the Dam and Reservoir Safety Program examines all failure surfaces that intercept the crest of the dam.

4. Earthquake

The required accelerations for earthquake design are listed in Table 4, 10 CSR 22-3.020. They are termed the Probable Maximum Acceleration and are dependent upon the location of the dam and the downstream hazard classification. These accelerations should be used with the cross section analyzed in the steady-seepage, full reservoir condition to determine the seismic stability of the embankment. The acceleration imparts a horizontal force to each slice which increases the moment of weight of the failing mass. As in the steady seepage cases, effective stress parameters should be used in the analysis.

Earthquake loading may result in the build-up of pore water pressures and a loss of strength for new dams constructed wholly or partially of cohesionless materials (such as sand and silt) or having a foundation of cohesionless materials. Engineers shall take this pore pressure increase and loss of strength into account when performing their stability analysis. The degree to which liquefaction may affect the factor of safety for slope stability is left up to the engineer's best judgement. Dynamic analyses of earth embankments are not required. Typically, a pseudo-static

analysis can be conducted to determine the likelihood of failure. In conductin g the analysis, very low strength parameters are assumed for the liquefaction zones.

E. Protection of Upstream Slopes

It is generally necessary to protect the upstream face of a dam from wave erosion. The orientation and length of the permanent pool, the purpose of the reservoir, and the duration of stages in flood control pools all affect the need for and the type of embankment protection. Embankments in northern Missouri that are constructed of friable, or loessial, soils are particularly susceptible to upstream slope erosion. Minor water level fluctuations lift soil particles from exposed surfaces and leave vertical banks along the water line.

Upstream slope protection usually consists of rock riprap, either dumped or handplaced. As a minimum, rock riprap should consist of hard durable rock, well graded, placed at a minimum thickness of 18 inches on 6 inches of well-graded gravel or a layer of geotextile (filter cloth). On dams with small reservoirs, a properly designed beaching slope can be used instead of riprap.

Judgement is required in the design of the vertical height of riprap. Protection should be provided both above and below the water storage elevation. The protection below the normal pool elevation is dependent upon several factors including the purpose of the reservoir and the base flow of the inflow stream. A water supply reservoir will generally have a wide range of stages during the year due to withdrawals. A recreation dam on a stream with a year round base flow normally only requires a minimal amount of riprap below the normal pool elevation. Maximum protection can be obtained by placing riprap on the upstream face of the dam from the toe to the crest; however, this is expensive and is normally not justified on smaller dams. As a general rule, riprap should be placed a few feet above and below the water storage elevation.

A recommended reference for the design of riprap slope protection is Riprap for Slope Protection Against Wave Action, (SCS, 1983).

F. Instrumentation

Instrumentation can significantly improve the overall safety of a dam by providing continuous surveillance of the structure. Instrumentation is normally associated with large high hazard dams, but it is also used in dams with unusual design features.

Instrumentation refers to the method and equipment used to make physical measurements of dams. Instrumentation is not, however, a substitute for inspection. It is a supplement to visual observations and inspections. Visual examinations are aided by monitoring instruments that measure seepage and leakage through and around the embankment, movements of the embankment and foundation, and water levels and pressures within the embankment and the foundation. Where instrumentation exists, adequate records of measurements, along with the visual observations, should be maintained. To be effective, these records should be continuous and periodically reviewed by a professional engineer experienced in the design and operation of embankment structures. Any change in behavior of the dam would signal a need for further review and analysis.

There are three general types of instruments used to monitor dams. These include seepage monitoring instruments, embankment movement instruments and water pressure instruments (piezometers). An excellent discussion of instrumentation is included in the Training Aids for Dam Safety (TADS) module entitled, Instrumentation for Embankment and Concrete Dams.

1. Seepage and Leakage

All dams seep to varying degrees and all seepage should be monitored and recorded. If there is visible flow, the quantity of water should be measured by channelizing the seepage and installing a pipe, weir, or a flume. A record should be kept of the discharge rate, the temperature of the seepage, and the reservoir elevation. Toe and/or foundation drains should also be monitored and data recorded along with the reservoir elevation. Any wet spots should be noted and the location, size, and condition recorded.

2. Embankment Movements

Considerable movement of embankment dams can be anticipated during and immediately after construction. Much of the movement may be attributed to foundation settlement under the load of the embankment. The embankment will also move as the reservoir is filled for the first time and may periodically experience cyclic movements as the reservoir is emptied and filled in succeeding seasons. Movements are determined by periodic measurements of monuments placed in or on the structure and abutments. For existing dams, monumentation to measure movements is usually limited to the crest and downstream slopes. The monuments are anchored in the embankment below the depth of normal seasonal volume change. Abutment monuments usually consist of steel rods or surveyor's markers embedded in concrete and placed in excavations in the abutments. Differences in elevation and location of the monuments are measured by transit and level surveys of the monuments.

Measurements of the locations of monuments on the surface of the embankment should be such that changes in both vertical and horizontal locations are measured. The measurements should be reduced to graphical displays of changes in vertical location, changes in horizontal

location along the axis of the embankment, and changes in horizontal location transverse to the axis of the embankment (upstream and downstream). The water surface elevation in the reservoir at the time of measurement of the monument is important and should be recorded along with the monument location data. The monuments should be tied to a bench mark that is outside the influence of the dam and reservoir. Monuments should be located in areas where they will not be damaged by normal traffic or operations.

3. Piezometric Pressures

A primary indicator of the performance of an embankment is the pore pressure distribution within the structure and its foundation. Pore pressures in embankments are measured by piezometers. There are basically three types of piezometers in common usage: (1) a hydraulic piezometer (open system) in which the water pressure is obtained directly by measuring the elevation of water standing in a pipe or vertical tube; (2) an electronic piezometer (closed system) in which the water pressure deflects a calibrated membrane and the deflection is measured electronically to give the water pressure; and (3) a gas pressure unit (diaphragm system) in which the water pressure is measured by balancing it with pressurized gas in a calibrated unit.

In large high hazard dams, piezometers should be installed to determine the location of the phreatic line and the pressure distribution along a potential failure surface. Piezometers should be installed so that the porous tip is located in the zone of interest within the dam. The line of piezometers should be perpendicular to the longitudinal axis of the embankment. In large structures, there may be several lines of piezometers, while in smaller structures and existing dams perhaps one line of 3-5 piezometers would be adequate.

CHAPTER VI

ANALYSIS OF CONCRETE GRAVITY STRUCTURES

This section applies only to small concrete gravity dams, overflow weirs, sills, and walls on the crest of a dam. It does not apply to concrete gravity dams greater than 50 feet in height, arch dams, or buttress dams. These topics are beyond the scope of this booklet.

A concrete gravity dam is a structure that is designed so that its own weight provides the major resistance to the forces exerted upon it. If the foundation is adequate, and the dam is properly designed and constructed, a solid concrete dam is a permanent structure which requires little maintenance. It is generally constructed of unreinforced blocks of concrete with flexible seals in the joints between the blocks. The most common types of concrete gravity dam failure are overturning or sliding on the foundation.

The foundation for a gravity dam must be capable of resisting the applied forces without overstressing the dam. The horizontal forces on the dam tend to make it slide in a downstream direction, which results in horizontal stresses at the base of the dam. These in turn may try to induce shear failure in the concrete at the base, along the concrete-foundation contact, or within the foundation. Overturning moments result in stresses which may cause crushing of the rock along the toe.

Table 2, 10 CSR 22-3.020 lists stability criteria for conventional concrete dams. The failure mechanisms that must be analyzed include overturning, sliding, structural integrity, and seismic.

A. Forces Acting On The Dam

To analyze the safety of gravity dams, it is necessary to determine the forces which may be expected to affect the stability of the structure. The forces which must be considered are those due to:

1) external water pressure (reservoir and tailwater);
2) internal water pressure (pore pressure or uplift) in the dam and foundation;
3) silt pressure;
4) ice pressure;
5) earthquake;
6) weight of the structure; and
7) forces from gates and other appurtenant structures.

When analyzing the crest of an overflow section, the possibility of subatmospheric pressure developing between the overflowing sheet of water and concrete should be considered. This phenomenon is known as cavitation and can cause serious damage to concrete.

Figure 6.1 shows a nonoverflow concrete section loaded with reservoir water and tailwater. Symbols and definitions for this loading are given below.

Ψ = angle between face of element and the vertical.

T = horizontal distance from upstream edge to downstream edge of section.

I = moment of inertia of base of section 1-foot wide about its center of gravity, equal to $T^3/12$.

w_c = unit weight of concrete.

w = unit weight of water.

h or h' = vertical distance from reservoir water or tailwater, respectively , to base of section.

P or P' = reservoir water or tailwater pressure, respectively, at base of section. It is equal to wh or wh'.

W_o = dead load weight above base of section under consideration including the weight of the concrete, w_c, plus such appurtenances as gates and bridges.

W_w or W'_w = vertical component of reservoir water or tailwater load, respectively, on face above base of section.

M_o = moment of W_o, about center of gravity of base of section.

M_w or M'_w = moment of W_w or W_w' about center of gravity of base of section.

V or V' = horizontal component of reservoir water or tailwater load, respectively, on face above base of section. This is equal to $\frac{wh^2}{2}$ for V and $\frac{w(h')^2}{2}$ for V'.

M_p or M'_p = moment of V or V' about center of gravity of base of section, equal to $\frac{wh^3}{6}$ for M_p and $\frac{w(h')^3}{6}$ for M'_p.

$\sum W$ = resultant vertical force above base of section.

$\sum V$ = resultant horizontal force above base of section.

$\sum M$ = resultant moment of forces above base of section about center or gravity of base of section.

e = distance from midpoint of base of section to point where resultant

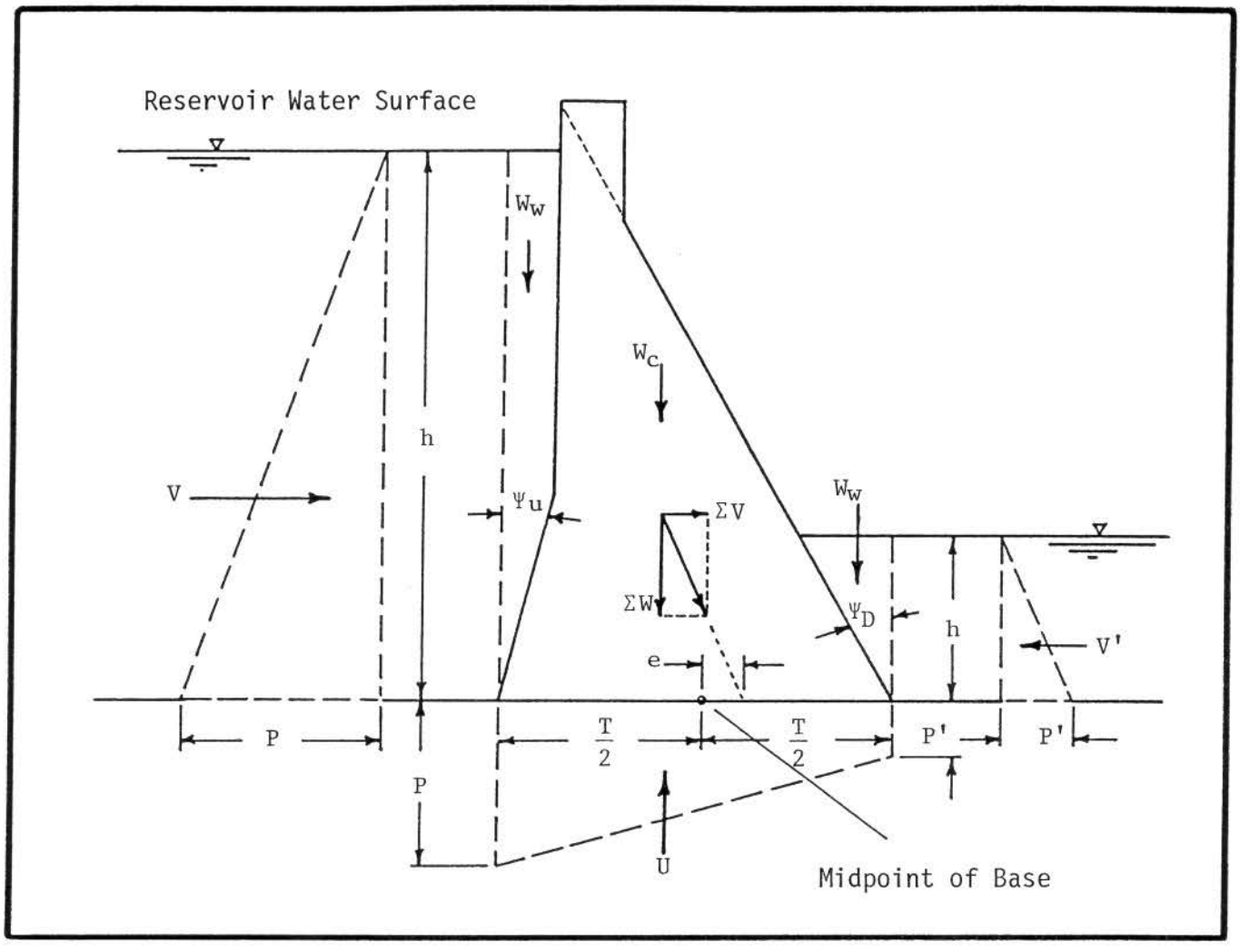

Figure 6.1 Forces Acting on a Concrete Gravity Dam (From Design of Small Dams)

of $\sum W$ and $\sum V$ intersects base of section. It is equal to $\sum M / \sum W$.

U = total uplift force on horizontal section, equal to $T\left(\frac{P+P'}{2}\right)$

The loadings have been summed into horizontal and vertical components, which implies that the foundation or potential failure plane is horizontal or nearly horizontal. If the foundation or potential failure plane is substantially sloped, the loads should be resolved into components normal and parallel to that plane.

1. External Water pressure

External water pressure must be considered on both overflow and nonoverflow sections. Figure 6.1 illustrates water pressure on a nonoverflow section. On the upstream face, the horizontal force is **V** and the vertical force is $\mathbf{W_W}$. The weight of water is generally accepted as 62.4 pounds per cubic foot.

On overflow dams without control features, the total horizontal water pressure on the upstream face is represented by the trapezoid abcd in Figure 6.2. The unit pressures at the top and at the bottom are $62.4h_1$ and 62.4h, respectively. The resultant force passes through the center of gravity of the trapezoid.

The vertical pressure component of water flowing over the top of the spillway is not used in the analysis because most of the total head has changed to velocity head. The sheet of water flowing on the downstream face generally does not exert enough pressure on the dam to warrant consideration. Where tailwater or backwater ponds against the downstream face, it is treated in the same manner as the tailwater in Figure 6.1. The only exception is during major flows when the tailwater pressures are

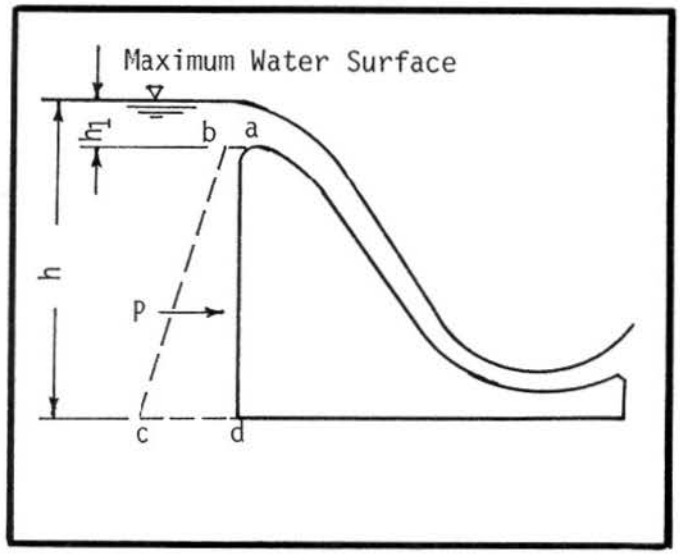

Figure 6.2 Water Pressure on an Overflow Concrete Dam (From Design of Small Dams)

involved in dissipating energy. During this condition, they may contribute only minor stabilizing forces on the dam.

2. Internal Water Pressure

Internal water pressure is an important factor which must be considered on both rock and soil foundations. The intensity of uplift pressure under a concrete dam on a rock foundation is difficult to determine. If the base of the concrete section is not instrumented, it is generally assumed that pore pressures in rock or concrete act over the entire base of the section. It is evident that under sustained loading the uplift pressure at the upstream face is equal to the full reservoir pressure. Its distribution approaches a straight-line variation from this point to the tailwater pressure at the downstream face, or zero if there is no tailwater. This is true not only at the contact between the dam and foundation but within the body of the dam itself. Even if drains are provided to relieve excess hydrostatic pressure, it is still common practice to assume a straight-line pressure distribution from the upstream to downstream toe.

Uplift pressures under a concrete dam on a pervious foundation are related to seepage through permeable materials. Water percolating through pore spaces in the foundation material is affected by frictional resistance in much the same way as water flowing through a pipe. The magnitude and distribution of seepage pressures in the foundation and the amount of underseepage for a given coefficient of permeability can be obtained from a flow net. An excellent reference for flow net construction is given by Cedergren (1977). The intensity of the uplift can be controlled by construction of properly placed aprons, cutoffs, and other devices.

3. Silt pressure

Nearly all streams carry an appreciable amount of silt during flood flows. This is especially true in northern and western Missouri. Where silt is present in a stream on which a concrete dam is built, it will eventually find its way to the reservoir and be deposited adjacent to the dam. If allowed to accumulate against the upstream face of the dam, the saturated silt exerts pressure greater than the hydrostatic pressure of water due to its heavier unit weight. In the absence of reliable test data, a rather common assumption of the magnitude of saturated silt pressure is to consider the horizontal pressure as equivalent to that of a fluid weighing 85 pounds per cubic foot and the vertical weight as 120 pounds per cubic foot.

Many small gravity dams and spillway structures have been designed without regard to silt load. In general, the silt load against storage dams will be a small factor. Against diversion dams, however, it is likely to be more important. In either case there is some basis for neglecting the silt load, especially in the design of concrete spillway weirs and sills.

4. Ice Pressure

Ice pressure is produced by thermal expansion in the ice sheet and by wind drag. The necessary allowance to be made for ice load in the design of a concrete dam is difficult to determine. Data concerning the physical characteristics of ice such as its crushing strength, its modulus of elasticity, and the effects of plastic flow are inadequate and approximate. The thrust exerted by expanding ice depends on the thickness of the sheet, the rate of temperature rise in the ice, fluctuations in the water surface, character of the reservoir shore line, wind drag, and other factors. The rate of temperature rise in the ice is a function of rate of rise of the air temperature and the amount of snow cover on the ice. Lateral restraint of the ice sheet depends on the character of the reservoir shore line.

Because of all these variables, the engineer is faced with a difficult task in estimating the amount of ice pressure acting against a structure. Rose (1947) developed several charts to analyze ice pressure. His charts were reprinted by the U. S. Department of the Interior (1974) in Design of Small Dams and show the thrust in kips for ice thicknesses up to 4 feet and for air temperature rises of 5°, 10°, or 15° F. per hour.

5. Earthquake

Earthquakes impart accelerations to the dam which usually increase the effective loadings on the dam. An allowance for earthquake effects must therefore be made in the analysis of concrete gravity dams and appurtenant structures.

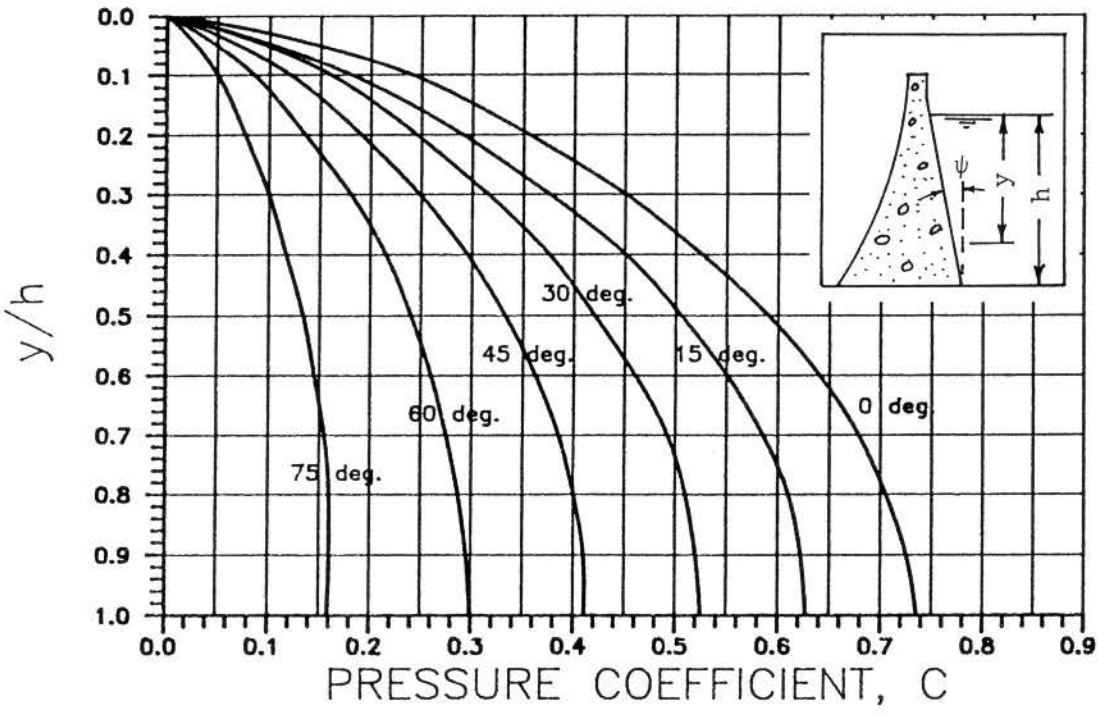

Figure 6.3 Coefficient for Pressure Distribution for Constant Sloping Surfaces

Both vertical and horizontal earthquake loads should be applied in the direction which produces the least stable structure. For the condition of full reservoir this will be a foundation movement in the upstream direction and a foundation movement downward. The upstream movement increases the downstream force of the water and silt loads and produces a downstream inertial force from the mass concrete in the dam. The downward movement decreases the effective weight of the water above a sloping face and of the concrete in the dam. Increasing the horizontal loads in a downstream direction and decreasing the effective weights tend to decrease the stability of the structure. In order to determine the total forces due to an earthquake, the earthquake acceleration must be determined from Table 4, 10 CSR 22-3.020. Table 4 contains horizontal accelerations. Vertical accelerations should be approximated as 50% of the horizontal acceleration.

a. Horizontal Earthquake Force

The effect of inertia on the concrete should be applied at the center of gravity of the mass, regardless of the shape of the cross section. For dams with vertical or sloping upstream faces, the increase in water pressure, P_e, in pounds per square foot, at any elevation due to horizontal earthquake loading is given by Equation 6.1:

$$P_e = C\lambda wh, \qquad (6.1)$$

where

C = a dimensional coefficient giving the distribution and magnitude of pressures;

λ = earthquake intensity (% of gravity);

w = unit weight of water, pcf; and

h = total depth of reservoir at section being studied in feet.

Values of C for various degrees of slope and relations of h and the vertical distance from the reservoir surface to the elevation in question may be obtained from Figure 6.3. The total horizontal force, V_e, above any elevation y distance below the reservoir surface is given by Equation 6.2:

$$V_e = 0.726 P_e y, \qquad (6.2)$$

where

y = the vertical distance from the reservoir surface to the elevation in question in feet.

The total overturning moment, M_e, above elevation y is determined by Equation 6.3:

$$M_e = 0.299 P_e y^2 \qquad (6.3)$$

For dams and structures with a combination vertical and sloping face, the procedure to be used is governed by the relation of the height of the vertical portion to the total height of the dam. If the height of the vertical portion of the upstream face of the dam is equal to or greater than one-half the total height of the dam, it should be analyzed as if it is vertical throughout. If the height of the vertical portion of the upstream face of the dam is less than one-half of the total height of the dam, the pressures should be determined on a sloping line connecting the point of intersection of the upstream face of the dam and reservoir surface with the point of intersection of the upstream face of the dam and the foundation.

b. Vertical Earthquake Force

On sloping faces of dams the weight of the water above the slope should be modified by the appropriate acceleration factor. The weight of the concrete also should be modified by this acceleration factor.

6. Weight of Structure

The weight of the structure includes the weight of the concrete plus appurtenances such as gates and bridges. For most low dams and other concrete structures, only the dead load due to the weight of the concrete is used in the analysis. The unit weight of concrete is considered to be 150 pounds per cubic foot. The total weight acts vertically through the center of gravity of the cross section.

B. Requirements for Stability

A concrete gravity structure must be designed to resist, with ample factor of safety, three failure conditions: overturning, sliding, and overstressing.

1. Overturning

There is a tendency for a gravity structure to overturn about the downstream toe at the foundation or about the downstream edge of any horizontal section. If the vertical stress at the upstream edge of any horizontal section computed without uplift exceeds the uplift pressure at that point, the dam is considered safe against overturning. The most critical condition for inducing overturning is when, at the upstream face, the uplift pressure exceeds the vertical stress at any horizontal section. To perform an analysis of this condition, a combined pressure diagram must be developed.

Under stable conditions the resultant of the horizontal and vertical loads on the structure will be balanced by an equal and opposite force which constitutes the reaction of the foundation. The vertical reaction of the foundation, computed without uplift, is represented by the trapezoid A12B in Figure 6.4B. The vertical normal stresses A1 and B2 are determined by the use of eccentric loading formulas as shown in Equations 6.4 and 6.5:

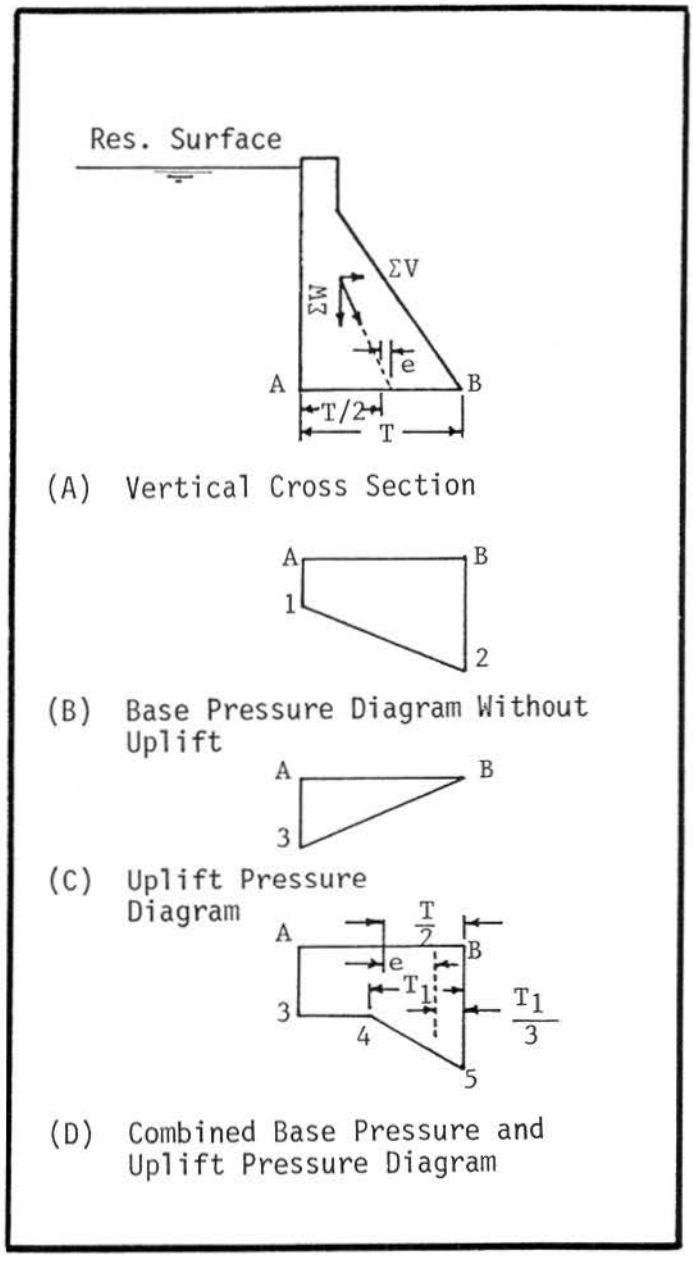

Figure 6.4 Foundation Base Pressures for a Concrete Gravity Dam (From Design of Small Dams)

$$A1 = \frac{\sum W}{T}\left(1 - \frac{6e}{T}\right) \tag{6.4}$$

$$B2 = \frac{\sum W}{T}\left(1 + \frac{6e}{T}\right) \tag{6.5}$$

When uplift is introduced and the uplift pressure at the upstream face is less than A1, compression exists on the

upstream face. When the uplift at A is greater then A1, the upstream face is in tension and cracking will occur. To analyze this condition, the foundation pressure diagram must be revised. The following procedure is used:

(1) A horizontal crack is assumed to exist and extend from the upstream face toward the downstream face to a point where the vertical stress of the adjusted diagram is equal to the uplift pressure at the upstream face. This is point 4 in Figure 6.4D.
(2) Taking moments about the center of gravity of the base, the following equations are obtained:

$$e' = \frac{\sum M}{\sum W - A3 \cdot T}, \qquad (6.6)$$

$$T_1 = 3\left(\frac{T}{2} - e'\right), \qquad (6.7)$$

$$B5 = \frac{2(\sum W - A3 \cdot T)}{T_1} + A3, \qquad (6.8)$$

where
e' = eccentricity of the stress diagram after cracking;
$\sum M$ = summation of moments of all forces;
$\sum W$ = summation of vertical forces;
$A3$ = internal hydrostatic pressure at the upstream face;
T = thickness of section at base; and
T_1 = remaining uncracked portion of the structure.

If B5 is less than the allowable stress for the concrete in any horizontal section or less than the allowable stress in the concrete and foundation for a horizontal section at the foundation, the dam is considered to be safe against overturning.

2. Sliding

The horizontal force, $\sum V$, in Figure 6.4A tends to displace the dam in a horizontal direction. This tendency is resisted by the shear resistance of the concrete or the foundation.

The shear friction factor of safety is the sliding stability criterion for all concrete dams and should generally be used for other structures on rock foundations. The shear friction factor of safety, Q, is shown in Equation 6.9:

$$Q = \frac{cA + (\sum W - U)\tan\phi}{\sum V}, \qquad (6.9)$$

where
c = cohesion value of concrete or foundation;
A = area of base considered; and
$\tan\phi$ = coefficient of internal friction of concrete or foundation.

The values of cohesion and internal friction of the rock or rock-concrete contact must generally be determined by special laboratory tests. For certain rock types, free from adverse geologic structures, cohesion and internal friction can be estimated from published test data. Rock with infilled jointing or lamination and other adverse geologic structures require investigation and testing of the properties of the rock surfaces and infilling material.

3. Structural Integrity

The unit stresses in the concrete and foundation must be kept within prescribed maximum values. Normally, the stresses in the concrete of small gravity dams will be so low that a concrete mix designed to meet other requirements such as durability and workability will attain sufficient strength to insure a reasonable factor of safety.

The foundation should be investigated and the maximum allowable stress established. When the foundation consists of soils, the engineering properties of the material should be determined along with the allowable bearing pressure. If there is any doubt as to the proper classification and adequacy of the foundation materials, laboratory tests should be made to determine the allowable bearing pressures.

CHAPTER VII

GEOLOGICAL CONSIDERATIONS

Careful evaluation of geologic conditions at potential lake sites and sound design and construction practices can greatly enhance lake development. It can also save the owner money during the life of the dam.

All dams seep, and below normal rainfall, combined with a high rate of seepage can cause wide fluctuations in lake levels at some reservoirs. When dams are constructed without any borings or consideration for the geological conditions of the lake site, the likelihood that the dam will experience seepage and safety problems increases dramatically. Unfortunately, many owners discover that a geological investigation should have been performed after the dam is built. Seepage and stability problems are frequently linked to geologic conditions. To reduce seepage, it is sometimes necessary to grout the abutments or foundation, construct a new cutoff trench, or construct an impermeable earthern blanket in the reservoir basin. These are all expensive options, particularly if the work is done after the dam is built.

A surface geological evaluation of the proposed lake site should be made by a qualified geologist. The purpose of the visual investigation is to observe geologic conditions that are not evident from maps or reports of previous studies. At the same time, observations can be made of the presence or absence of springs or seeps, the type and thickness of soil, the characteristics of exposed bedrock outcrops, the presence of karst features, and whether the stream is losing or gaining. An excellent source of information for evaluating potential lake sites in Missouri is a booklet entitled, A guide for the geologic and hydrologic evaluation of small lake sites in Missouri, written by Dean, Barks, and Williams (1976).

The Rules and Regulations of the Missouri Dam and Reservoir Safety Council require engineers to submit exploration records and test results for all new dams that will be regulated under the dam safety law. The exploration records are normally in the form of boring logs which detail the strata and composition of the foundation and abutments at the lake site. The regulations do not specify the type or number of borings.

Typically, an owner will request his engineer to obtain borings at 100-200 foot intervals along the proposed dam centerline across the valley. The actual interval will depend on local conditions and the length of the proposed dam. There should be at least one hole in each abutment and two of the valley holes should extend 10 to 20 feet into bedrock. Backhoe pits can be excavated in potential borrow areas to determine the type and quantity of material available to construct the dam. Care must be taken in obtaining samples from the borrow areas to determine the strength of the soil that will be used in the dam. As pointed out in Chapter V, soil does not have predictable strength properties like concrete or steel. It must be tested at the density at which it will be placed to determine its strength. Construction permits issued by the Dam and Reservoir Safety Program require that density testing of the fill be performed during construction. This requirement is made to insure that the material is placed in accordance with the design specifications.

A. Core Trench Requirements

It is common practice to construct a core trench to control seepage beneath new dams. Subsurface borings give the engineer an indication of how deep the core trench will have to be and how much material must be removed. If the core trench extends to bedrock, the engineer should evaluate the rock strata to insure that the trench has penetrated all weathered rock and the underlying material is free from undesirable geological features.

An understanding of the weathering process is important. Rock at the earth's surface is continually being broken down by weathering. One of the most common weathering processes is the freezing of water in cracks accompanied by expansion of the ice and subsequent fracturing of the rock. Numerous cycles of freezing and thawing can produce extensive weathering.

The flow of water through rock can weaken some minerals and leave the remainder susceptible to wind or water erosion. The broken particles resulting from the weathering process are often transported by air, ice, water, or gravity and redeposited. The modes of deposition can be extremely variable and can cause considerable differences in the successive layers of the deposited or sedimentary material. Hence, sedimentary rocks are often characterized by the great variety in the material in the successive layers. Except for the St. Francois mountain region, Missouri's surface bedrock is almost exclusively sedimentary rock.

There are several types of defects that exist in bedrock. Some of the potential defects in a rock foundation include faults, joints, fractures, and bedding planes. An inspection of the core trench during construction can identify problems and insure that they are corrected before the trench is backfilled.

Faults are common in Missouri, but few are active. Faults are ruptures in rock formations and are caused by high-magnitude tectonic forces. Joints in sedimentary

rock are formed as a result of weathering. The primary difference between faults and joints is the method by which they are formed. When portions of a formation move with respect to each other, the discontinuity produced is termed a fault. If there is a discontinuity but no movement has occurred, the break would be called a joint or fracture. The term fracture can refer to a joint or a fault but always denotes a discontinuity in the rock mass.

Water percolating through fractures can alter the mineral of the adjacent rock and in some cases actually dissolve portions of it. This process occurs in many of the carbonate rock formations in southern Missouri and results in a weak, altered material. The solution joint that is produced can be open, closed, or filled with some type of secondary material. In many cases, the secondary material found in the joint is weak clay. Joints generally tend to be more weathered and open near the surface and narrow with increasing depth. Regardless of whether the joints are filled, it is necessary to identify them during the core trench inspection. Foundation leakage can be reduced by washing and then grouting the joints and fractures. Large clay seams and sand zones in the bedrock need to be excavated and backfilled with compacted clay.

Separations between bedding planes are a type of joint primarily associated with sedimentary rock. The shale and sandstone region of west central Missouri has distinct bedding planes. During construction of the core trench, all weathered shale should be removed.

Faulting and jointing in carbonate rocks may contribute to the development of karst conditions. Deposited clay material along such discontinuities may be washed away with increased head. A severe increase in abutment seepage can sometimes occur during the initial filling of the reservoir. This can be associated with the erosion of clay in abutment joints. It is therefore important to construct a good core trench up the abutment walls as well as along the base of the valley.

Glacial materials deposited by Pleistocene continental ice sheets are prevalent in northern Missouri. Varying thicknesses of till and loess characterize this area. The soils are highly erodible and contribute to siltation problems. Common core trench problems include sand-gravel alluvium and buried channels. Unconsolidated, permeable drift soils in foundations and in reservoir areas are likely to create defects in a dam and must be removed. Because of wide variations in the glacial deposits, proposed dam sites should be thoroughly investigated.

Depending on the region of the state, many different types of soil and bedrock may be encountered. It is important to review detailed published geologic and soil maps before beginning an exploration program or excavating a core trench. Maps and other published reports on Missouri geology are available from the Division of Geology and Land Survey, 111 Fairgrounds Road, P.O. Box 250, Rolla, Missouri 65401.

B. Spillways

Open channel spillways can be located in rock or soil. Borings should be conducted to determine the extent of bedrock and soil in the proposed spillway location. Rock cut spillways are generally erosion resistant and require less maintenance than grass lined soil spillways. Excavation of the rock frequently requires the use of explosives. A well trained, experienced blasting contractor should be retained to perform all blasting at new dams and to enlarge rock cut spillways at existing dams. Overblasting can result in the creation of new joints in the underlying bedrock which can lead to seepage and weathering problems during the life of the dam. An experienced blasting contractor can produce rock from the spillway excavation that can be used as riprap for slope protection, discharge channel erosion protection, and toe berms.

A pre-blast and post-blast survey should be conducted when using explosives at an existing dam when homes and other structures are located nearby. In addition, the staff of the Dam and Reservoir Safety Program requires the owner of an existing dam to monitor slope movement and seepage as part of any construction permit which authorizes blasting.

Where bedrock is deep, the spillway channel should either be lined, retaining walls should be constructed, or the soil cut slopes should be designed to be stable. Many different types of soil can be encountered. Soils may be classified by their origin or mode of deposition. The broadest divisions are residual soils and transported soils. Residual soils are formed by in place chemical and physical decomposition of parent rock or soil material. The deeply weathered clays in southern Missouri are an example of residual soils. Transported soils are moved from their original site of deposition by water, gravity, wind, or ice. They can be deposited in water or on land. The loess soils in northern and western Missouri were transported and deposited by wind. Loess is highly erodible and care should be exercised when designing open channel spillways in it.

Colluvium is soil that has been transported downslope on hillsides primarily by the influence of gravity. In addition to gravity, movement of the soil is aided by ice heave, overturning of tree roots, and water. Abutments that are characterized by bent tree trunks, hummocky or irregular slopes, landslide scars, or heterogeneous soil mixtures likely have colluvial materials at their base. Colluvium can be particularly hazardous to existing dams where landsliding may impact the reservoir, spillways, or other appurtenant structures. This is especially true in open channel spillways.

A stability analysis should be conducted of all spillway cut slopes in soil. A slope failure can result in a spillway becoming blocked by slide debris.

CHAPTER VIII

ENGINEERING SURVEYS

Engineering surveys for dam safety include the study and selection of sites for new dams, construction surveying, and the procurement of data for design and analysis. For new construction, engineering surveying is closely allied to the various stages of project development. The American Society of Civil Engineers (1985) published a manual on engineering surveys, which includes a chapter on dam construction. It is a good reference for practicing engineers to use in planning preliminary and design surveys.

A. Site Selection Survey

An engineering survey program for a dam generally originates as a preliminary or reconnaissance study of one or more sites. The preliminary study does not determine the feasibility of a project; it does, however, provide an important source of data for planners and designers of the project to use in making siting and preliminary design determinations.

The preliminary survey and siting procedure begins with the best available contour maps, such as the U.S. Geological Survey 1 in. = 2000 ft (1:24000) scale quadrangle maps. If the maps used are from two or more sources, care must be taken to insure that the vertical datums are compatible. Possible site locations can then be noted on these maps and a limited amount of field work performed to verify the accuracy of the maps at the published scale. Any changes which have taken place subsequent to development of the maps can be noted during a field reconnaisance.

Care must be exercised when using old maps. Several years are involved in the compilation of mass-produced maps, and many years may pass before the maps are revised. Significant changes may have taken place in the area since the maps were compiled, which could seriously impair the accuracy and usefulness of the maps.

10 CSR 22-3.040(1)(A)12 requires engineers to submit topographic surveys with the construction permit application. Once a site has been selected, additional exploration and testing will usually be performed. Unless the project is very small in scope, photogrammetric mapping probably will be the most economical and expedient means for obtaining the necessary large scale, detailed topographic maps for the engineering design and construction operations. The optimum time for obtaining the photography for mapping is the time interval from January through early April. This is primarily due to the better sun angle and absence of foliage on the trees. The project may have areas obscured by dense tree or underbrush cover in the summer and early fall. Information derived from the geological investigation of the site should be plotted on the photogrammetric map. This includes the location of borings and test pits for future reference.

It is important to establish baselines and temporary benchmarks at an early stage of the design. A horizontal and vertical control survey net should control all five survey programs: preliminary, engineering design, property acquisition, construction, and post-construction. Adequate horizontal and vertical control survey monumentation should be provided to carry the project through the construction stage. Vertical control should be based on the North American Vertical Datum of 1929 where possible. Location of the monumentation on or near the final right-of-way lines generally will serve best to preserve them from disturbance or destruction during construction. In addition, the monumentation should be designed to accommodate post-construction maintenance and control needs such as monitoring the performance or movement of the structure throughout its useful life.

Information obtained from the engineering design survey will be used to layout the core trench, the dam, the spillways, and all appurtenant works in the drawings and during construction staking. Borrow pit location, access roads, material and equipment storage areas, and diversion channels will be delineated on the plans and tied to established baselines. Suitable map scales for reservoir areas and large dam sites will vary with the size of the reservoir areas and roughness of the terrain. Maps for design drawings and structural details may be needed at scale ratios of 1 in. = 10 ft. (1:120) to 1 in. = 100 ft. (1:600). Aerial photography of these particular structural design areas, at the proper altitude for the desired special photogrammetric mapping, should be obtained at the same time as the photography for the overall mapping.

In planning the survey program for the engineering and design phase of project development, consideration must also be given to property acquisition, construction, and post-construction survey programs. This will avoid expensive resurveys or even more costly redesign or correction of already completed portions of the project.

The Rules and Regulations of the Dam and Reservoir Safety Council do not require owners to submit boundary surveys of the reservoir or the dam site. Flood easements are the sole responsibility of the owner. Before building a dam, it is advisable for the owner to obtain the written consent of all persons, agencies, or authorities owning property which may be inundated by the dam on a temporary or permanent basis. This will require a determination

of the impoundment area below the top of dam elevation.

B. Construction Surveying

Upon completion of the engineering design for the project, location and construction surveys and monumentation will be required. Dam site centerlines are usually staked for the convenience of the design engineers, but offset reference monuments will be needed to reestablish the centerline location as construction proceeds. These offset reference monuments should carry both horizontal and vertical positions.

If the area is heavily wooded, the control reference line may be located along a roadway, railway, or electric power transmission line clearing which roughly parallels the stream. Offset traverses to the reference line can then be computed in the office and surveyed in the field. Construction control requirements usually involve more than the basic establishment of centerlines and strategically located bench marks. Supplemental control may also be required at many locations around and on a structure for activities such as setting concrete forms and aligning pipes.

Before the embankment is started, original and final excavated topography of the foundation and the core trench should be obtained to prepare as-built drawings following construction. During construction, survey checks should be made from time to time of monuments to detect any horizontal or vertical disturbance which may have been caused by construction equipment.

The execution of the construction surveys may be the responsibility of the owner, the contractor, or it may be a divided responsibility in accordance with the specifications. In some cases, the owner may establish and maintain principal centerline and grade references while the construction contractor performs required layout work and detailed referencing of the construction.

The reference line monumentation should be preserved for use in postconstruction maintenance and control surveys. The location of the core trench, all internal drains, and pipes should be tied to a reference line. The design may include provisions for the contractor to install monitoring instruments in the dam to detect internal changes and horizontal and vertical movement.

Another aspect of construction surveys is height data. Vertical control must be established to determine the elevation of the crest of the dam and the toe. Because the dam safety law only applies to dams that are over 35 feet in height, care must taken to establish the elevation of the toe of the dam for future reference. This is especially true at sites where the owner plans to build a dam less than 35 feet in height. Post-construction grading can obscure the toe and old creekbed after the dam is complete.

In order to obtain a construction permit to build a dam greater than 35 feet in height, hydrological information must be analyzed and submitted. This includes the flow elevation of all spillways, channel profiles and cross sections, the water storage elevation, inlet and outlet works elevations, and stage-storage information for the reservoir. This information is normally included on the plans. It is necessary to know the topography of the dam site to design a spillway system that will keep the dam from being overtopped during the design flood.

C. Analyzing Existing Dams

Dam safety inspections include an engineering survey to obtain data to perform a hydrologic and hydraulic analysis of the dam and to determine the slope of the embankment faces. The survey includes a profile of the crest, a cross section of the embankment at the maximum section, invert elevations of pipes, cross sections of open channel spillways, location and top elevation of dikes along the discharge channel, and dimensions of inlet and outlet structures.

The two most common methods employed by the staff of the Dam and Reservoir Safety Program are stadia surveys and level and tape surveys. The primary benefit of performing a stadia survey is to develop a plan of the dam and spillways. The location of observable defects such as slides, uncontrolled seepage exit points, and cracks can be determined and plotted on a plan view. It also gives the engineer analyzing the dam additional information concerning the location of the spillways and discharge channels in relation to the dam. With the widespread use of electronic distance measuring equipment, this information can be determined in a few hours. Level and tape surveys are adequate for most dams. Because elevations are the most important data for the hydrologic and hydraulic analysis, a level traverse should be completed and closed on the beginning benchmark.

Stationing for the crest profile must be close enough to determine the lowest elevation on the dam. This elevation is the location where water will first overtop the crest. Stations should extend far enough to include all spillways, except in the case of tailings dams where spillways are typically located several hundred feet upstream. Elevations should be rounded off to the nearest 0.05 ft. A higher degree of accuracy is not needed because the results of the overtopping analysis are normally rounded off to the nearest .1 ft. If the crest is crowned or if the crest slopes from one shoulder to the other, the elevations should be taken at the highest point.

The engineer should attempt to tie the survey to a National Geodetic Vertical Datum (NGVD) but that is not always possible. When an assumed elevation is used, a temporary benchmark should be established near the dam at a location that will remain undisturbed if modifications are required. A nail or spike in a tree near the dam works well. All references to the benchmark should be labeled "local datum". Because the stage-storage curve will be derived from USGS maps, the survey should include the local normal pool elevation which can be related to a reservoir elevation on the map. It is good practice to include an

equation in the inspection report for converting local survey elevations to the elevations on the topographic map.

The engineer should obtain a cross section of the embankment at the maximum section to establish the height of the dam and determine the upstream and downstream slopes. At dams where the old steambed has been covered, it may be necessary to take several elevations along the toe to determine the lowest point in accordance with 10 CSR 22-1.020(59). The station of the embankment cross section should be noted and the engineer should obtain enough points to plot the cross section in the inspection report.

The invert elevations or flow lines of all pipes, inlet structures, and outlet structures should be determined. This information will be used to rate the spillways and establish the water storage (normal pool) elevation. Dimensions and elevations of inlet structures are very important. It may be necessary to make soundings in a deep drop inlet structure to determine the upstream flow line of the discharge pipe.

The final phase of the engineering survey involves open channel spillways. Figure 4.5 shows a plan of a typical open channel emergency spillway. In order to determine the capacity of the channel and derive the water surface profile, a backwater analysis is required. The purpose of the backwater analysis is to rate the channel, determine the location of the control, determine the velocities expected in the channel, and compute the depth of water throughout the channel during the design flood. The term "control" applies to the channel section that regulates discharge. This cannot be determined visually. In fact, the location of the control can change with increasing discharge. Therefore, enough cross sections must be obtained to rate the channel at several discharges.

After the highest elevation in the channel is determined, cross sections should be laid out on the ground. Elevations should be taken at every break in slope and distances measured between each point. The left bank, right bank, and center of channel distances must be determined between each cross section. The bank elevations should extend to the top of dam elevation or to the top of training berms and dikes. The training berm information will be used to determine if it will be overtopped during the spillway design flood.

The survey notes should include information about the type of surface in the spillway. The information should be sufficient to estimate the roughness of the channel at each cross section.

REFERENCES

American Society of Civil Engineers, 1985, Engineering surveying manual: American Society of Civil Engineers Manuals and Reports on Engineering Practice No. 64, New York, N.Y.

Casagrande, A., 1937, Seepage through dams: Journal of New England Water Works Association, June, p. 295-336.

Cedergren, H. R., 1977, Seepage, drainage, and flow nets: John Wiley and Sons, Inc, New York, N.Y.

Chow, V. T., 1959, Open channel hydraulics: McGraw-Hill, New York, N.Y.

Chow, V. T., 1964, Handbook of Applied Hydrology: McGraw-Hill, New York, N.Y.

Cowan, W. L., 1956, Estimating hydraulic roughness coefficients: Agricultural Engineering, v. 37, no. 7, p. 473-475.

Dean, T. J., Barks, J. H., and Williams, J. H., 1976, A guide for the geologic and hydrologic evaluation of small lake sites in Missouri: Water Resources Report no. 31, Missouri Department of Natural Resources, Division of Geology and Land Survey, Rolla, Missouri.

Eagleson, P. E., 1970, Dynamic hydrology: McGraw-Hill, New York, N.Y.

Engman, E. T., 1986, Roughness coefficients for routing surface runoff: Journal of Irrigation and Drainage Engineering, American Society of Civil Engineers, v. 112, n. 1, p. 39-53.

Fread, D. L., 1984, DAMBRK: The NWS dam-break flood forecasting model: U. S. Department of Commerce, National Weather Service, Office of Hydrology, Silver Spring, Maryland.

Gray, D. M., 1961, Synthetic unit hydrographs for small drainage areas: Journal of the Hydraulics Division, American Society of Civil Engineers, v. 87, n. 4.

Hathaway, G. A., 1945, Design of drainage facilities: Transactions, American Society of Civil Engineers, v. 110, p. 697-730.

Henderson, F. M., and Wooding, R. A., 1964, Overland flow and groundwater flow from a steady rainfall of finite duration: Journal of Geophysical Research, v. 69, n. 8, p. 1531-1540.

Henderson, F. M., 1966, Open channel flow: Macmillan Publishing Company, Inc., New York, N.Y.

Hjelmfeldt, A. T., and Cassidy, J. J., 1976, Hydrology for engineers and planners: Iowa State University Press, Ames, Iowa.

Horton, R. E., 1932, Drainage-basin characteristics: Transactions, American Geophysical Union, p. 350.

Huang, Y. H., 1983, Stability analysis of earth slopes: Van Nostrand Reinhold Company, New York, N.Y.

Huff, F. A., 1980, Precipitation relations for use in dam safety project: Illinois State Water Survey, Urbana, Illinois.

Huggins, L. F. and Burney J. R., 1982, Surface runoff, storage, and routing: American Society of Agricultural Engineers, Hydrological Modeling of Small Watersheds, Chapter 5, St. Joseph, Michigan.

Kerby, W. S., 1959, Time of concentration for overland flow: Civil Engineering, v. 29, n. 3, p. 174.

Kirpich, Z. P., 1940, Time of concentration of small agricultural Watersheds: Civil Engineering, v. 10, n. 6, p. 362.

Lambe, T. L. and Whitman, R. V., 1969, Soil mechanics: John Wiley and Sons, Inc, New York, N.Y.

Missouri Department of Natural Resources, 1986, Maintenance, inspection, and operation of dams in Missouri: Missouri Department of Natural Resources, Division of Geology and Land Survey, Dam and Reservoir Safety Program.

Missouri Department of Natural Resources, 1989, Rules and regulations of the Missouri dam and reservoir safety council: Missouri Department of Natural Resources, Division of Geology and Land Survey, Dam and Reservoir Safety Program.

Munger, D. F., Bartholomew, C. L., Marshall, G. S., Miller, D.G., Tanner, D. T., and James, R. L., 1989, Instrumentation for embankment and concrete dams: Training Aids for Dam Safety, United States Government Printing Office.

National Research Council, 1985, Safety of dams - flood and earthquake criteria: National Academy Press, Washington, D.C.

Perloff, W. H. and Baron, W., 1976, Soil mechanics principals and applications: Ronald Press Company, New York, N.Y.

Portland Cement Association, 1964, Handbook of concrete culvert pipe hydraulics: Portland Cement Association, Skokie, Illinois.

Ramser, C. E., 1927, Runoff from small agricultural watersheds: Journal of Agricultural Research, v. 34, n. 9.

Rose, E., 1947, Thrust exerted by expanding ice sheet: Transactions, American Society of Civil Engineers, v. 112, p. 871.

Sherard, J. L., Woodward, R. J., Gizienski, S. F., and Clevenger, W. A., 1963, Earth and earth-rock dams: John Wiley and Sons, Inc., New York, N.Y.

Sherard, J. L., Dunnigan, L. P., and Talbot, J. R., 1984, Basic properties of sand and gravel filters: Journal of Geotechnical Engineering, American Society of Civil Engineers, v. 110, n. 6.

Sherard, J. L., Dunnigan, L. P., and Talbot, J. R., 1984, Filters for silts and clays: Journal of Geotechnical Engineering, American Society of Civil Engineers, v. 110, n. 6.

Simon, A. L., 1986, Hydraulics: Third Edition, John Wiley and Sons, Inc., New York, N.Y.

Singh, V. P., 1988, Hydrologic systems, rainfall-runoff modeling: v. 1, Prentice Hall, Engelwood Cliffs, New Jersey.

Snyder, F. F., 1938, Synthetic unit graphs: Transactions, American Geophysical Union, v. 19, p. 447-454.

Soil Conservation Service, 1972, National engineering handbook: U. S. Department of Agriculture, Soil Conservation Service, Section 4, Hydrology, Washington, D.C.

Soil Conservation Service, 1983, Riprap for slope protection against wave action: U. S. Department of Agriculture, Soil Conservation Service, Technical Release n. 69, Washington D.C.

Soil Conservation Service, 1985, Earth dams and reservoirs: U. S. Department of Agriculture, Soil Conservation Service, Technical Release n. 60, Washington, D.C.

Soil Conservation Service, 1986, Urban hydrology for small watersheds: U. S. Department of Agriculture, Soil Conservation Service, Technical Release n. 55, Washington, D.C.

Swenty, B. J., 1989, Time characteristics of small watersheds in response to the probable maximum precipitation: Dissertation presented to the University of Missouri-Rolla in partial fulfillment of the requirements of the degree Doctor of Philosophy.

Taylor, A. B., and Schwartz, H. E., 1952, Unit hydrograph lag and peak flow related to basin characteristics: Transactions, American Geophysical Union, v. 33, p. 235-246.

U. S. Army Corps of Engineers, 1982, National program of inspection of non-federal dams, Final Report to Congress: U. S. Army Corps of Engineers, Office of the Chief of Engineers, Washington, D. C.

U. S. Army Corps of Engineers, 1985, HEC-2 water surface profile model: U. S. Army Corps of Engineers, Hydrologic Engineering Center, Davis, California.

U. S. Army Corps of Engineers, 1987, HEC-1 flood hydrograph package - users manual: U. S. Army Corps of Engineers, Hydrologic Engineering Center, Davis, California.

U. S. Department of Commerce, 1961, Rainfall frequency atlas of the United States: Weather Bureau, Technical paper 40, Washington, D.C.

U. S. Department of Commerce, 1978, Probable maximum precipitation estimates, United States East of the 105th Meridian: National Oceanic and Atmospheric Administration, Hydrometeorological Report No. 51, Washington, D.C.

U. S. Department of the Interior, 1974, Design of small dams: Bureau of Reclamation, Washington, D.C.

U. S. Department of Transportation, 1965, Hydraulic charts for the selection of highway culverts: Federal Highway Administration, Hydraulic engineering circular n. 5, Washington, D.C.

U. S. Department of Transportation, 1972, Capacity charts for the hydraulic design of highway culverts: Hydraulic engineering circular n. 10, Federal Highway Administration, Washington, D.C.

U. S. Geological Survey ,1967, Roughness characteristics of natural channels: Water Supply Paper n. 1849, U. S. Department of the Interior, Washington, D.C.

Vick, S. G., 1983, Planning, design, and analysis of tailings dams: John Wiley and Sons, Inc, New York, N.Y.

Viessman, W, Harbaugh, T. E., and Knapp, J. W., 1972, Introduction to hydrology: Intex Educational Publishers, New York, N.Y.

APPENDIX A

PERMIT FORMS

APPLICATION FOR CONSTRUCTION PERMIT

DATE_____

PART I: GENERAL INFORMATION

Owner(s) Name:_____

Address:_____

_____ Zip_____

Phone:_____

Name of Dam:_____I.D. No. MO_____

County _____

Location of Dam Centerline at Maximum Section:_____

Sect._____, Twp._____North, Rg._____;

Approximate UTM Coordinates_____N _____E

Dam Height:_____ Reservoir Area:_____

Owner's Engineer_____Reg. No._____

Address:_____

_____Zip:_____

Phone: _____

ATTACHED DOCUMENTS (Note: This Application is Not Complete Without Parts II and III)

PART II: DESIGN REPORT CONSIDERATIONS*

PART III CONSTRUCTION DOCUMENTS*

SUBMIT TO: Dam and Reservoir Safety Program
Division of Geology & Land Survey
Department of Natural Resources
P.O. Box 250
Rolla, Missouri 65401

* See Rules and Regulations for Clarification

APPLICATION FOR SAFETY PERMIT

DATE_____ _____

PART I: GENERAL INFORMATION

Owner(s) Name: _____

Address: _____

_____ Zip: _____

Phone: _____

Name of Dam: _____ I.D. No. MO_____

County _____

Location of Dam Centerline at Maximum Section:

Sect._____, Twp._____ North, R_____;

Approximate UTM Coordinates_____

Dam Height:_____ Reservoir Area:_____

Owner's Engineer_____Reg.No._____

Address:_____

_____Zip_____

Phone: _____

ATTACHED DOCUMENTS: (Note - This Application is Not Complete Without Addressing Part II)

PART II: AS-BUILT PLANS*.

SUBMIT TO: Dam and Reservoir Safety Program
Division of Geology and Land Survey
Department of Natural Resources
P.O. Box 250
Rolla, Missouri 65401

* See Rules and Regulations for Clarification

APPLICATION FOR REGISTRATION PERMIT

DATE_____

PART I: GENERAL INFORMATION

Owner(s) Name:_____

Address:_____

_____Zip_____

Phone:_____

Name of Dam:_____I.D. No. MO_____

County_____

Location of Dam Centerline at Maximum Section:_____

Sect._____, Twp._____North, Rg._____;

Approximate UTM Coordinates _____N _____E

Dam Height:_____ Reservoir Area:_____

Owner's Engineer_____Reg. No._____

Address:_____

_____ Zip:_____

Phone: _____

ATTACHED DOCUMENTS (Note: This Application is Not Complete Without Parts II thru VI)

PART II: REQUIRED CERTIFICATIONS BY ENGINEER*

PART III INSPECTION REPORT*

PART IV REPORT ON CORRECTION OF DEFECTS (if applicable)*

PART V PROPOSED OPERATION AND MAINTENANCE PLAN*

PART VI REPORT ON CONSTRUCTION SEQUENCE**

SUBMIT TO: Dam and Reservoir Safety Program
Division of Geology & Land Survey
Department of Natural Resources
P.O. Box 250
Rolla, Missouri 65401

* See Rules and Regulations for Clarification
** For Industrial Water Retention Dams only

ATTACHMENT

CONSTRUCTION PERMIT APPLICATION

DAM NAME _____ **ID #** MO _____

COUNTY _____ **DATE** _____

OWNER CERTIFICATION

I, the undersigned, owner, whose Post office Address is _____ _____, Zip _____, do hereby accept and approve these plans.

_____

Owner

ENGINEER CERTIFICATION

I hereby certify that these plans for the (construction of, or alteration of) the _____ _____(Name of Dam) were prepared by me or under my direct supervision for the owners thereof.

_____

(Name of Firm)

_____

(Registered Engineer and P.E. #)

(Engineer's Seal)

ATTACHMENT

SAFETY PERMIT APPLICATION

DAM NAME _____ **ID #** MO _____

COUNTY _____ **DATE** _____

☐ **ENGINEER CERTIFICATION**

I hereby certify that the construction of the _____ _____(Name of Dam) was substantially in accordance with the approved plans and specifications on file with the Missouri Dam and Reservoir Safety Program.

_____

(Name of Firm)

_____

(Registered Engineer and P.E. #)

(Engineer's Seal)

ATTACHMENT

REGISTRATION PERMIT APPLICATION

DAM NAME _____ ID # MO _____

COUNTY _____ DATE _____

☐ **ENGINEER CERTIFICATION**

I hereby certify that I have inspected the _____ _____(Name of Dam) on _____ (Date) in accordance with the law.

☐ **ENGINEER CERTIFICATION**

I hereby certify that the owner of the _____ _____(Name of Dam) has complied with my recommendations to correct observed defects as required by law.

☐ **JUDGEMENT OF STABILITY**

At the time of my inspection, there were no observable indications that the dam was unsafe.

_____

(Name of Firm)

_____

(Registered Engineer and P.E. #)

(Engineer's Seal)

APPENDIX B

INVENTORY FORMS

DAM INVENTORY QUESTIONNAIRE

I.D. # MO _ _ _ _ _

1. NAME OF DAM: _____

2. OWNER: _____

OWNER'S ASSOCIATION: _____

ADDRESS: _____

CITY: _____ STATE: _____ ZIP: _____

PHONE: _____

. LOCATION OF DAM: COUNTY: _____

Township: _____N; Range: _____East/West; Section: _____1/4 _____1/4 _____

. NAME OF ENGINEER: _____

. NAME OF BUILDER OR CONTRACTOR: _____

. TYPE OF DAM: (CHECK BOXES THAT APPLY)

☐ EARTH ☐ ROCK OR ROCK FILL ☐ CONCRETE OR MASONRY ☐ TAILINGS

. USE OF LAKE: (CHECK BOXES THAT APPLY)

☐ RECREATION (FISHING, SWIMMING, ETC.) ☐ LIVESTOCK WATERING ☐ WATER SUPPLY

☐ CROP IRRIGATION ☐ INDUSTRIAL

. YEAR DAM WAS BUILT: _____

. SURFACE AREA OF LAKE: _____ ACRES

. DIMENSIONS OF DAM: (FILL IN BLANKS ON SKETCH)

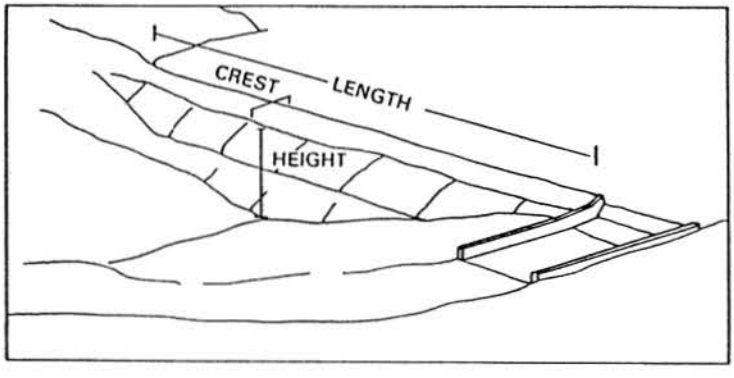

HEIGHT: _____

WIDTH OF CREST: _____

LENGTH OF DAM: _____

. PRIMARY SPILLWAY? ☐ YES ☐ NO

. EMERGENCY SPILLWAY? ☐ YES ☐ NO

. NAME OF PERSON FILLING OUT QUESTIONNAIRE:

_____

DATE: _____

AGRICULTURAL EXEMPTION INFORMATION SHEET

MISSOURI DAM & RESERVOIR SAFETY PROGRAM

NAME OF DAM: _____ ID# (MO_____)

OWNER: _____

ADDRESS: _____

CITY: _____ STATE: ____ ZIP: _____ PHONE ___/_____

TYPE OF DAM: ☐ EARTH ☐ ROCK FILL ☐ CONCRETE/MASONRY

☐ OTHER _____

USE OF LAKE: (Check all boxes that apply)

☐ RECREATION (FISHING, SWIMMING, ETC.) ☐ LIVESTOCK WATERING

☐ WATER SUPPLY ☐ FISH REARING ☐ CROP IRRIGATION ☐ INDUSTRIAL

CURRENT NUMBER OF LIVESTOCK ON FARM THAT RECEIVE WATER FROM LAKE:

HORSES ____ HOGS ____ CATTLE ____ SHEEP ____ OTHER ____

METHOD OF WATERING LIVESTOCK:

☐ DIRECT ACCESS TO LAKE ☐ WATERING TANK ☐ OTHER

FARM SIZE (acres): TOTAL ____ PASTURE ____ HAY ____ WOODLAND ____ CROP ____

NUMBER OF FISH RAISED AND SOLD LAST YEAR:

CATFISH _____ TROUT _____ CARP _____ OTHER _____

ARE FISH RAISED IN CONFINEMENT CAGES? ☐ OR HARVESTED BY SEINING? ☐

NUMBER OF ACRES IRRIGATED AND TYPE OF CROPS:

CORN ____ AC. SOYBEANS ____ AC. MILO ____ AC. HAY ____ AC.

OTHER _____

TYPE OF IRRIGATION EQUIPMENT: TRAVELING GUN ☐ CENTER PIVOT ☐

STATIONARY SPRINKLER ☐ FLOOD IRRIGATION ☐

PUMPING FROM LAKE ☐ GRAVITY WITHDRAWAL FROM LAKE ☐

NAME OF PERSON FILLING OUT THIS QUESTIONNAIRE: _____

_____

DATE: _____ COMMENTS: _____

_____

APPENDIX C

RAINFALL DATA FOR MISSOURI

TABLE C.1

Precipitation Values for Counties in Missouri

County	6-Hour Duration			12-Hour Duration			24-Hour Duration		
	50-Year	100-Year	PMP*	50-Year	100-Year	PMP*	50-Year	100-Year	PMP*
Adair	4.8	5.2	27.1	5.5	6.3	32.0	6.4	7.0	33.5
Andrew	5.0	5.4	27.0	5.9	6.6	32.0	6.6	7.3	33.8
Atchison	4.9	5.3	26.7	5.9	6.4	31.6	6.4	7.1	33.2
Audrain	4.8	5.2	27.7	5.6	6.3	32.9	6.5	7.2	34.5
Barry	5.5	6.0	28.9	6.5	7.2	34.4	7.6	8.4	37.8
Barton	5.4	6.0	28.4	6.4	7.1	33.9	7.4	8.2	36.5
Bates	5.3	5.8	28.0	6.2	7.0	33.3	7.2	8.0	35.6
Benton	5.1	5.7	28.1	6.0	6.8	33.4	7.0	7.7	35.6
Bollinger	4.8	5.2	28.7	5.6	6.2	34.0	6.6	7.2	36.5
Boone	4.9	5.3	27.7	5.7	6.4	33.0	6.6	7.3	34.7
Buchanan	5.0	5.5	27.2	6.0	6.7	32.2	6.7	7.4	34.0
Butler	4.9	5.4	28.9	5.8	6.4	34.5	6.7	7.4	37.3
Caldwell	5.0	5.4	27.3	5.9	6.6	32.3	6.7	7.4	34.1
Callaway	4.9	5.3	27.8	5.7	6.4	33.1	6.6	7.3	34.8
Camden	5.0	5.6	28.2	6.0	6.7	33.6	7.0	7.7	36.0
Cape Girardeau	4.8	5.1	28.6	5.5	6.1	34.0	6.5	7.1	36.2
Carroll	5.0	5.4	27.4	5.8	6.6	32.7	6.7	7.4	34.3
Carter	5.0	5.5	28.8	5.8	6.5	34.3	6.8	7.5	37.0
Cass	5.2	5.7	27.8	6.1	6.9	33.1	7.1	7.9	35.0
Cedar	5.3	5.9	28.3	6.3	7.0	33.8	7.3	8.0	36.3
Chariton	4.9	5.3	27.4	5.7	6.4	32.5	6.6	7.3	34.2
Christian	5.3	5.9	28.8	6.3	7.0	34.3	7.3	8.0	37.4
Clark	4.6	5.1	27.0	5.4	6.0	31.8	6.2	6.8	33.2
Clay	5.1	5.6	27.4	6.0	6.7	32.7	6.8	7.6	34.4
Clinton	5.0	5.5	27.3	5.9	6.7	32.3	6.7	7.4	34.1
Cole	4.9	5.4	28.0	5.8	6.5	33.3	6.8	7.4	35.2
Crawford	5.9	5.3	28.3	5.7	6.4	33.6	6.6	7.4	35.9
Cooper	5.0	5.4	27.7	5.9	6.6	33.1	6.8	7.5	35.0
Dade	5.3	5.9	28.5	6.3	7.0	33.9	7.4	8.1	36.7
Dallas	5.2	5.7	28.4	6.1	6.8	33.8	7.1	7.8	36.5
Daviess	4.9	5.4	27.1	5.8	6.5	32.0	6.5	7.2	33.8
Dekalb	5.0	5.4	27.1	5.9	6.6	32.1	6.6	7.3	33.8
Dent	4.9	5.4	28.5	5.8	6.5	33.9	6.7	7.5	36.3
Douglas	5.2	5.8	28.8	6.2	6.9	34.3	7.1	7.9	37.5
Dunklin	4.9	5.4	29.1	5.8	6.4	34.8	6.8	7.5	38.0
Franklin	4.8	5.2	28.0	5.6	6.3	33.3	6.5	7.2	35.1
Gasconade	4.8	5.3	28.0	5.7	6.3	33.3	6.6	7.3	35.1
Gentry	4.9	5.3	26.9	5.8	6.5	31.8	6.5	7.2	33.5
Greene	5.3	5.9	28.6	6.3	7.0	34.0	7.3	8.0	37.0
Grundy	4.9	5.3	27.1	5.7	6.4	32.0	6.5	7.1	33.6
Harrison	4.9	5.3	26.9	5.7	6.4	31.8	6.4	7.1	33.3
Henry	5.2	5.7	28.0	6.1	6.9	33.3	7.1	7.8	35.5
Hickory	5.2	5.7	28.2	6.1	6.8	33.7	7.1	7.8	36.0
Holt	5.0	5.4	26.9	5.9	6.5	31.9	6.5	7.2	33.5

TABLE C.1

Precipitation Values for Counties in Missouri

County	6-Hour Duration			12-Hour Duration			24-Hour Duration		
	50-Year	100-Year	PMP*	50-Year	100-Year	PMP*	50-Year	100-Year	PMP*
Howard	4.9	5.3	27.6	5.7	6.5	32.9	6.7	7.4	34.5
Howell	5.1	5.7	28.9	6.0	6.8	34.5	7.0	7.8	37.5
Iron	4.9	5.3	28.5	5.7	6.3	33.8	6.6	7.3	36.2
Jackson	5.1	5.7	27.5	6.1	6.8	33.0	6.9	7.7	34.8
Jasper	5.5	6.0	28.5	6.5	7.2	34.0	7.5	8.3	37.0
Jefferson	4.8	5.2	28.1	5.5	6.1	33.3	6.4	7.1	35.2
Johnson	5.1	5.6	27.8	6.0	6.8	33.1	7.0	7.7	35.0
Knox	4.7	5.2	27.1	5.4	6.2	32.0	6.3	7.0	33.5
Laclede	5.1	5.7	28.4	6.0	6.7	33.8	7.0	7.7	36.4
Lafayette	5.1	5.6	27.6	6.0	6.7	32.9	6.9	7.6	34.8
Lawrence	5.4	6.0	28.6	6.4	7.1	34.1	7.4	8.2	37.1
Lewis	4.7	5.1	27.2	5.4	6.1	32.0	6.2	6.9	33.6
Lincoln	4.7	5.1	27.7	5.5	6.1	32.9	6.4	7.0	34.4
Linn	4.9	5.3	27.2	5.7	6.4	32.2	6.5	7.2	33.9
Livingston	4.9	5.4	27.5	5.8	6.5	32.2	6.6	7.3	34.0
McDonald	5.5	6.1	28.9	6.6	7.4	34.4	7.7	8.5	37.9
Macon	4.8	5.2	27.2	5.6	6.3	32.3	6.4	7.1	33.9
Madison	4.8	5.3	28.6	5.6	6.2	33.9	6.6	7.3	36.2
Maries	4.9	5.4	28.2	5.8	6.5	33.5	6.8	7.5	35.7
Marion	4.7	5.1	27.3	5.4	6.1	32.2	6.3	7.0	33.9
Mercer	4.8	5.3	26.9	5.6	6.3	31.8	6.4	7.0	33.3
Miller	5.0	5.5	28.1	5.9	6.6	33.5	6.9	7.5	35.8
Mississippi	4.8	5.1	28.9	5.5	6.1	34.2	6.5	7.1	37.0
Moniteau	5.0	5.4	27.9	5.9	6.6	33.2	6.8	7.5	35.0
Monroe	4.8	5.2	27.5	5.6	6.3	32.6	6.4	7.1	34.1
Montgomery	4.8	5.2	27.7	5.6	6.3	33.0	6.5	7.1	34.7
Morgan	5.0	5.5	28.0	6.0	6.7	33.3	6.9	7.6	35.5
New Madrid	4.8	5.3	29.0	5.6	6.2	34.5	6.6	7.2	37.2
Newton	5.5	6.1	28.7	6.5	7.3	34.2	7.6	8.4	37.5
Nodaway	4.9	5.3	26.8	5.8	6.5	31.6	6.4	7.1	33.3
Oregon	5.0	5.6	28.9	6.0	6.7	34.5	6.9	7.7	37.6
Osage	4.9	5.4	28.0	5.7	6.4	33.3	6.7	7.4	35.2
Ozark	5.2	5.8	28.9	6.2	6.9	34.5	7.2	7.9	37.8
Pemiscot	4.9	5.3	29.2	5.7	6.4	34.8	6.7	7.4	38.0
Perry	4.8	5.1	28.5	5.5	6.1	33.7	6.4	7.1	36.0
Pettis	5.0	5.6	27.8	6.0	6.7	33.2	7.0	7.6	35.0
Phelps	4.9	5.4	29.3	5.8	6.5	33.7	6.8	7.5	36.0
Pike	4.7	5.1	27.6	5.4	6.1	32.7	6.3	7.0	34.0
Platte	5.1	5.6	27.3	6.0	6.7	32.5	6.8	7.6	34.3
Polk	5.2	5.8	28.4	6.2	6.9	33.9	7.2	7.9	36.5
Pulaski	5.0	5.5	28.3	5.9	6.6	33.8	6.9	7.6	36.1
Putnam	4.8	5.2	26.9	5.5	6.2	31.8	6.3	7.0	33.2
Ralls	4.7	5.1	27.5	5.4	6.1	32.6	6.3	7.0	34.0
Randolph	4.8	5.3	27.5	5.7	6.4	32.7	6.5	7.2	34.2

TABLE C.1

Precipitation Values for Counties in Missouri

County	6-Hour Duration			12-Hour Duration			24-Hour Duration		
	50-Year	100-Year	PMP*	50-Year	100-Year	PMP*	50-Year	100-Year	PMP*
Ray	5.0	5.5	27.4	5.9	6.7	32.7	6.8	7.5	34.4
Reynolds	4.9	5.4	28.7	5.8	6.4	34.0	6.7	7.4	36.5
Ripley	5.0	5.5	28.9	5.9	6.6	34.5	6.8	7.5	37.5
St. Charles	4.7	5.1	27.8	5.5	6.1	33.0	6.4	7.0	34.7
St. Clair	5.2	5.8	28.2	6.2	6.9	33.5	7.2	7.9	36.0
St. Francois	4.8	5.2	28.4	5.6	6.2	33.6	6.5	7.2	35.9
St. Louis	4.7	5.1	27.9	5.4	6.1	33.1	6.3	7.0	34.8
St. Louis City	4.7	5.1	27.9	5.4	6.0	33.0	6.3	7.0	34.8
Ste. Genev	4.8	5.1	28.3	5.5	6.1	33.6	6.5	7.1	35.8
Saline	5.0	5.4	27.6	5.9	6.6	33.0	6.8	7.5	34.6
Schuyler	4.7	5.2	26.9	5.5	6.2	31.8	6.3	6.9	33.2
Scotland	4.7	5.1	26.9	5.4	6.1	31.8	6.2	6.9	33.2
Scott	4.8	5.2	28.8	5.6	6.1	34.1	6.5	7.1	36.6
Shannon	5.0	5.5	28.7	5.9	6.6	34.2	6.8	7.6	37.0
Shelby	4.8	5.2	27.3	5.5	6.2	32.3	6.4	7.0	33.9
Stoddard	4.8	5.3	28.9	5.7	6.3	34.3	6.6	7.3	37.0
Stone	5.4	6.0	28.9	6.4	7.1	34.5	7.5	8.2	37.7
Sullivan	4.8	5.3	27.0	5.6	6.3	32.0	6.4	7.1	33.5
Taney	5.3	5.9	28.9	6.3	7.0	34.5	7.4	8.1	37.8
Texas	5.0	5.6	28.6	6.0	6.7	34.0	6.9	7.6	37.0
Vernon	5.4	5.9	28.2	6.3	7.1	33.6	7.3	8.1	36.0
Warren	4.8	5.2	27.9	5.5	6.2	33.1	6.5	7.2	34.8
Washington	4.8	5.3	28.3	5.6	6.3	33.6	6.6	7.3	35.8
Wayne	4.9	5.3	28.7	5.7	6.3	34.1	6.7	7.4	36.8
Webster	5.2	5.8	28.6	6.2	6.9	34.0	7.2	7.9	37.0
Worth	4.9	5.3	26.8	5.7	6.4	31.6	6.4	7.0	33.3
Wright	5.1	5.7	28.6	6.1	6.8	34.0	7.1	7.8	37.0

* Probable Maximum Precipitation (PMP) values were taken from the National Weather Service publication, Hydrometeorological Report 51. All PMP values in Table C.1 are for 10 square mile areas.

ERRATA - October 16, 1989

CORRECTED TABLE C.1 Ray through Wright Counties